ⓐ piston rod processing per STAB-Spec. 10028959, table 1

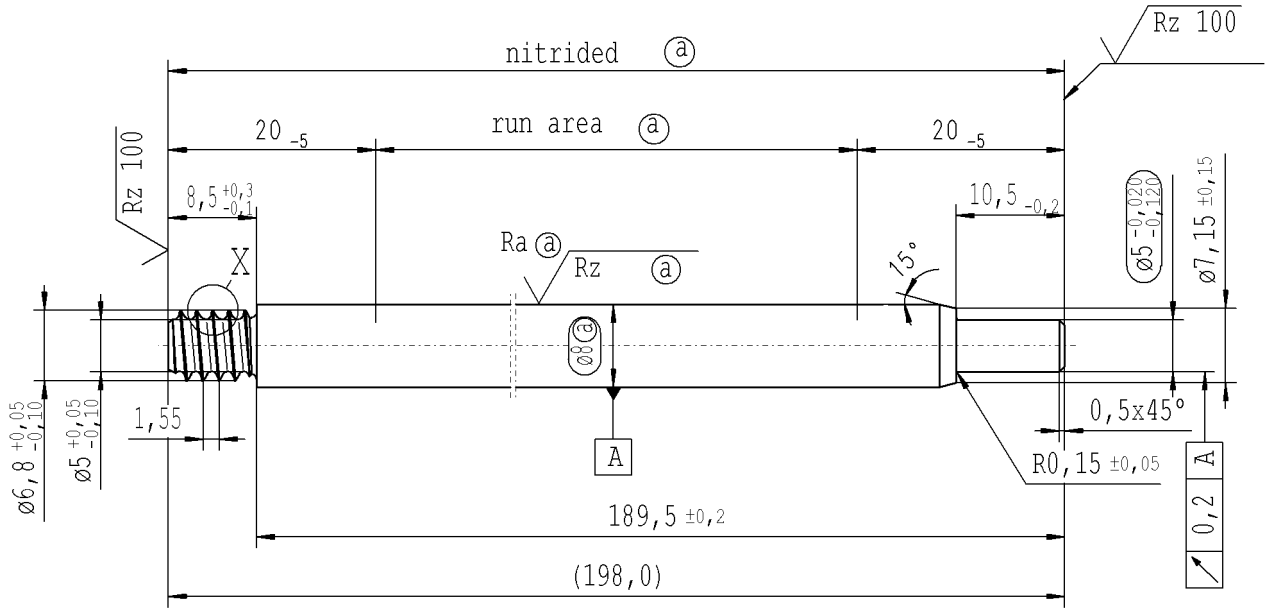

RELEASE
for supplier
company Zhang Shi

pre-worked:

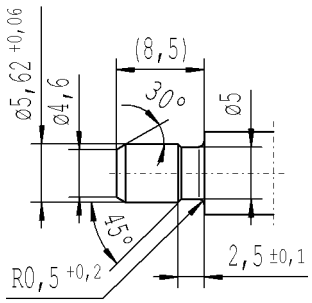

X 5:1

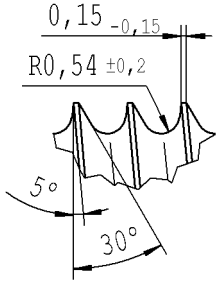

Rz 25 (Rz 100 Ra ⓐ Rz ⓐ) +0,2 -0,2

Environmental protection acc. to STAB-Spec. 10005649

DE: X	EN: X	ES:	IT:	PR:	FR:	RO:	CAD created document; handwritten changes not permitted
new	INITIAL RELEASE		run area				
old	-		hardness				
Field	-		F/4,5				
Date/Name	10.01.2008 Höfer		28.07.2010 Geisbüsch				
Chg. No.	-		581802				
Rev.	0		1				

Material: 1.1193 S45C JISG 4051

Edge tolerances acc. to DIN ISO 13715

Surface finish DIN ISO 1302

Replaces:

STABILUS

All dimensions are in mm

Scale: (Original DIN A3) 2:1

Identification of important characteristics

Dimensions without tolerances DIN ISO 2768 mK

We reserve all rights to this document, to any patents or patent registrations related hereto, and to the duplication, retransmission by third parties and misc. use. Any use of this document is not permitted without the written consent of STABILUS.

PISTON ROD

	Date	Name
Drawn by	10.01.2008	Höfer
Checked	28.07.2010	Klinkner

Document No.: 10151065

Material No.: 005680

Ident. Doc.:

Intended for internal and supplier use

The print-out is not subject to the modification service.

EN