The print-out is not subject to the modification service.

Intended for internal and supplier use

EN

(a) piston rod processing per STAB-Spec. 10028959 tab.I

(h) knurl-profile manufactured with knurl roll DIN 82 - RAA 0,5

100% cleanliness of through hole

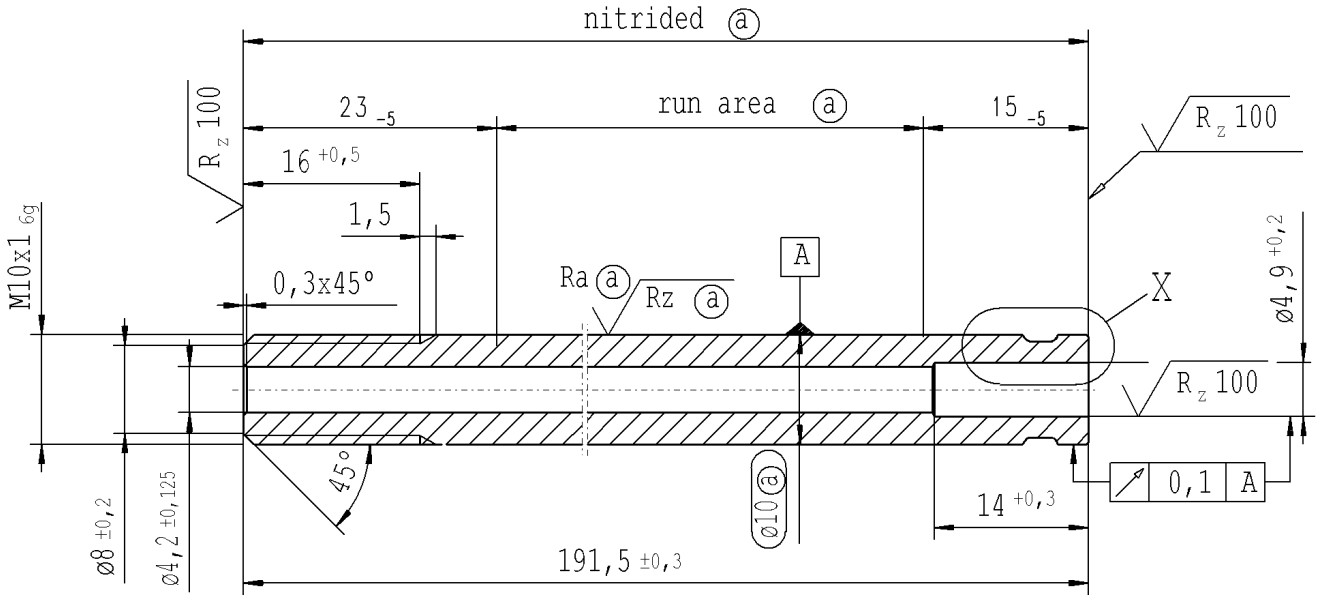


Control dimension!
100 % visual checking

X 5:1
before knurling

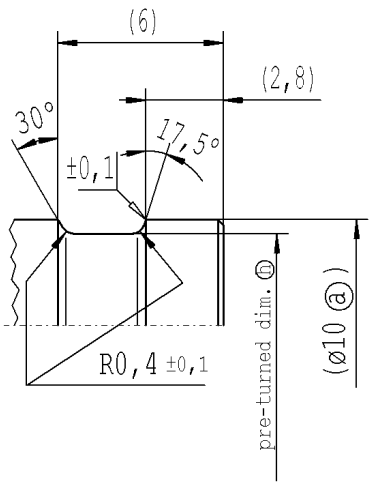


X 5:1
after knurling

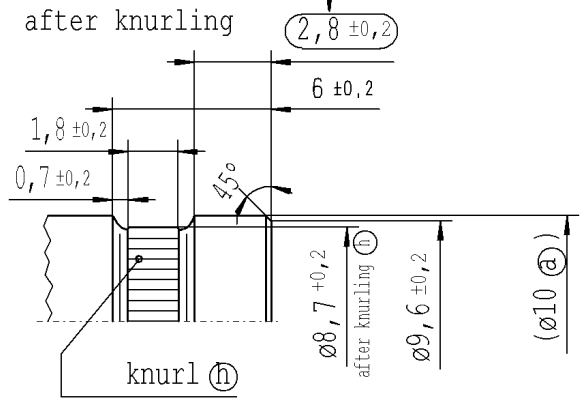


RELEASE
for supplier
company Zhang Shi

+0,2 -0,2 (±0,1) $\sqrt{R_z 25}$ ($\sqrt{R_z 100}$ Ra (a) $\sqrt{R_z (a)}$)

AIAG CQI-standards acc. to STAB-Spec. 10027692

Environmental protection acc. to STAB-Spec. 10005649

| DE: X | EN: X | ES: | IT: | PR: | FR: | RO: | CAD created document; handwritten changes not permitted |
|---|---|---|---|---|---|---|---|

| | | | | | |
|---|---|---|---|---|---|
| new | INITIAL RELEASE | ø4,2 ±0,125 | changed tolerances | run area | marking groove removed |
| old | - | ø4,2 ±0,15 | - | hardness | - |
| Field | - | D6 | B-E/1-6 | F 4 | - |
| Date/Name | 12.02.2008 Höfer | 27.02.2008 K.Marx | 07.01.2009 Hein | 23.7.10 Keßelh. | 13.06.2014 Hein |
| Chg. No. | - | - | 570251 | 581810 | 614234 |
| Rev. | 0 | 1 | 2 | 3 | 4 |

Material: 1.1193
S45C JISG 4051

Edge tolerances acc. to DIN ISO 13715

Surface finish DIN EN ISO 1302

Replaces:

STABILUS

All dimensions are in mm

Identification of important characteristics

Scale: 2:1 (Original DIN A3)

Dimensions without tolerances DIN ISO 2768-mK

We reserve all rights to this document, to any patents or patent registrations related hereto, and to the duplication, retransmission by third parties and misc. use. Any use of this document is not permitted without the written consent of STABILUS.

PISTON ROD

| | Date | Name |
|---|---|---|
| Drawn by | 12.02.2008 | Höfer |
| Checked | 13.06.2014 | Klinkner |

Document No.: 10152095

Material No.: 008884

Ident. Doc.: L15

***** Druckdatum: 16.06.2014 / 13:09:44 ***** Ausdruck nicht massstaeb ******