The print-out is not subject to the modification service.
Intended for internal and supplier use
EN

(a) piston rod processing per STAB-Spec. 10028959 tab.I

(h) knurl-profile manufactured with knurl roll DIN 82 - RAA 0,5

100% cleanliness of through hole

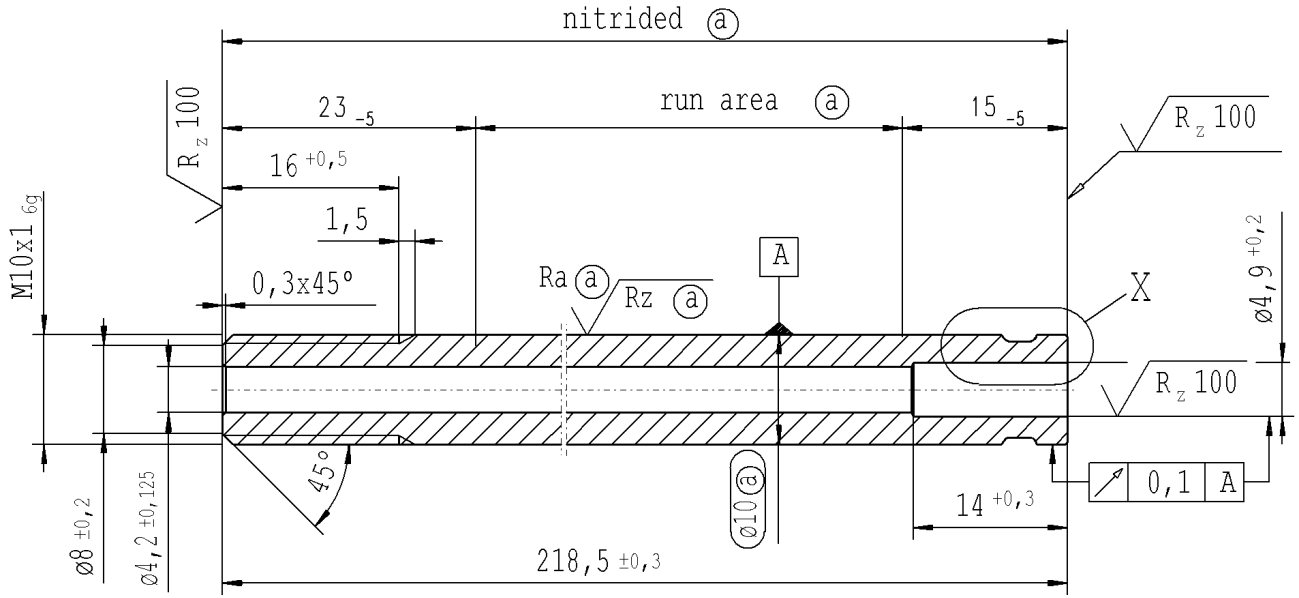

Control dimension!
100 % visual checking

X 5:1
before knurling

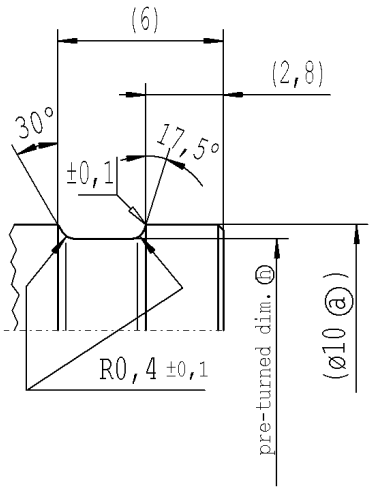

X 5:1
after knurling

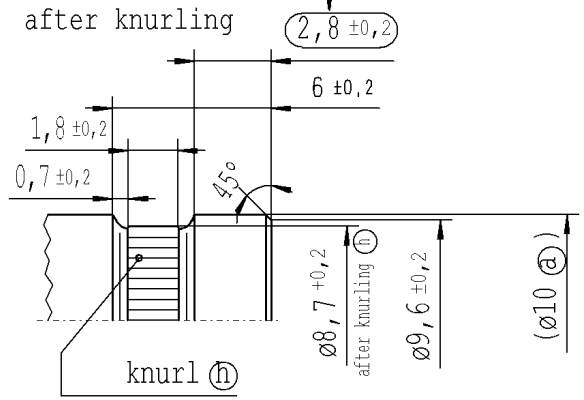

RELEASE
for supplier
company Zhang Shi

+0,2 -0,2 (±0,1) Rz 25 (Rz 100 Ra (a) Rz (a))

AIAG CQI-standards acc. to STAB-Spec. 10027692

Environmental protection acc. to STAB-Spec. 10005649

DE: X	EN: X	ES:	IT:	PR:	FR:	RO:	CAD created document; handwritten changes not permitted

new	INITIAL RELEASE	ø4,2 ±0,125	changed tolerances	run area	marking groove removed
old	-	ø4,2 ±0,15	-	hardness	-
Field	-	D6	B-E/1-6	F 4	-
Date/Name	12.02.2008 Höfer	27.02.2008 K.Marx	07.01.2009 Hein	23.7.10 Keßelh.	13.06.2014 Hein
Chg. No.	-	-	570251	581810	614234
Rev.	0	1	2	3	4

Material: 1.1193
S45C JISG 4051

Edge tolerances acc. to DIN ISO 13715

Surface finish DIN EN ISO 1302

Replaces:

STABILUS

All dimensions are in mm

Identification of important characteristics

Scale: 2:1 (Original DIN A3)

Dimensions without tolerances DIN ISO 2768-mK

We reserve all rights to this document, to any patents or patent registrations related hereto, and to the duplication, retransmission by third parties and misc. use. Any use of this document is not permitted without the written consent of STABILUS.

PISTON ROD

	Date	Name
Drawn by	12.02.2008	Höfer
Checked	13.06.2014	Klinkner

Document No.: 10152095

Material No.: 008888

Ident. Doc.: L18

***** Druckdatum: 16.06.2014 / 13:09:52 ***** Ausdruck nicht massstabtreu *****