The print-out is not subject to the modification service.

Intended for internal and supplier use

EN

ⓐ piston rod processing per STAB-Spec. 10028959, table 1

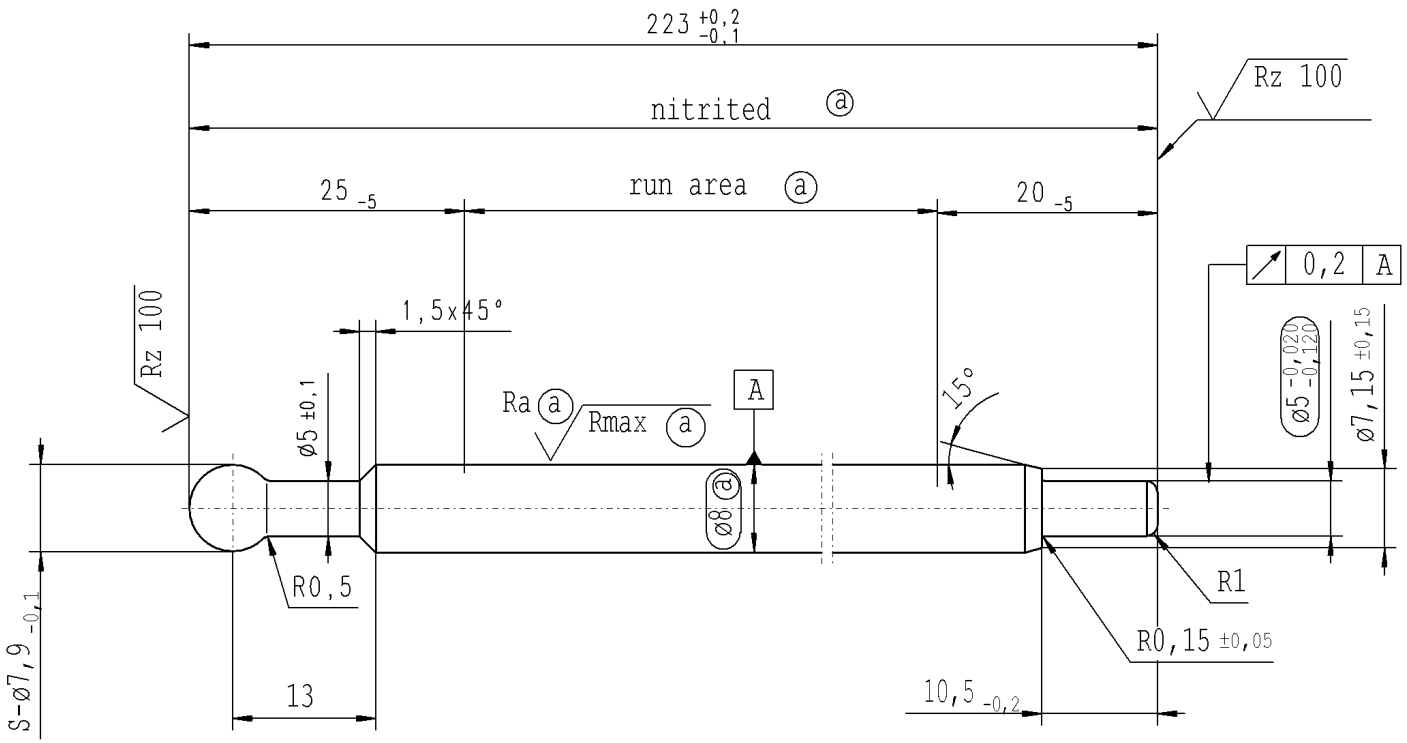

RELEASE
for supplier
company Zhang Shi
21.05.2015 Schilz A.
(date / signature)

Rz 25 (Rz 100 Ra ⓐ Rz ⓐ) +0,2 -0,2

AIAG CQI-standards acc. to STAB-Spec. 10027692

Environmental protection acc. to STAB-Spec. 10005649

DE: X	EN: X	ES:	IT:	PR:	FR:	RO:	CAD created document; handwritten changes not permitted

Ident. Doc.: L02		
new	initial release	R1
old	-	0,5x45°
Field	-	D/2
Date/Name	02.05.2011 K.Marx	20.05.2015 Hein
Chg. No.	588404	624054
Rev.	0	1

Material: 1.1193
S45C JISG 4051

Edge tolerances acc. to DIN ISO 13715

Surface finish DIN ISO 1302

Replaces:

STABILUS

All dimensions are in mm

Identification of important characteristics

Scale: (Original DIN A3) 2:1

Dimensions without tolerances DIN ISO 2768 mK

We reserve all rights to this document, to any patents or patent registrations related hereto, and to the duplication, retransmission by third parties and misc. use. Any use of this document is not permitted without the written consent of STABILUS.

PISTON ROD

	Date	Name
Drawn by	02.05.2011	K.Marx
Checked	20.05.2015	Klinkner

Document No.: 10151870

Material No.: 281309

***** Druckdatum: 02.06.2015 / 15:32:05 ***** Ausdruck nicht massoetreu *****