The print-out is not subject to the modification service.

Intended for internal and supplier use

EN

supp. No.	material no.					KOST without surface treatment	A overall length	B stud length piston side	F version
	surface treatment processing acc. to STAB-Spec. 10006248								
	table IV Nislide black	table V Nislide light	table VIII Nislide black	table X Nislide "G"	table XVI Nislide black				
1	3383AH						93.0	10.5	1
2	727547						342.0	10.5	1
3	4180AV				4180AV		537.0	10.5	1
4	511733						222.0	10.5	1
5	331918			331918			219.0	10.5	1
6	365602						96.0	10.5	1
7	8093AP						156.0	10.5	1
9	5598AU		0697SN				114.0	10.5	1
10	3776BN						69.0	10.5	1
11	316156						255.0	10.5	1
12	116343			116343			260.0	10.5	1
13	868289						168.0	10.5	1
15	316202			316202			132.0	10.5	1
16	4754BA		3073RN	4754BA			222.0	10.5	1
17	766828			766828			197.0	10.5	1
19	243124			243124			171.0	10.5	1
21	367990						126.0	10.5	1
22	548243						162.0	10.5	1
23	273350			273350			162.0	10.5	1
26	6705BJ		7553NB	6705BJ			243.0	10.5	1
29	8057LQ			8057LQ			363.0	10.5	1
30	3219CL						195.0	11.5	1
32	276952		3103RV	276952			258.0	10.5	1
33	339199			339199			123.0	10.5	1
35	7967CS			7967CS			336.0	10.5	1
37	268275				268275		357.0	10.5	1
38	306207						177.0	10.5	1
40	305340						315.0	10.5	1
41	7317DF						369.0	10.5	1

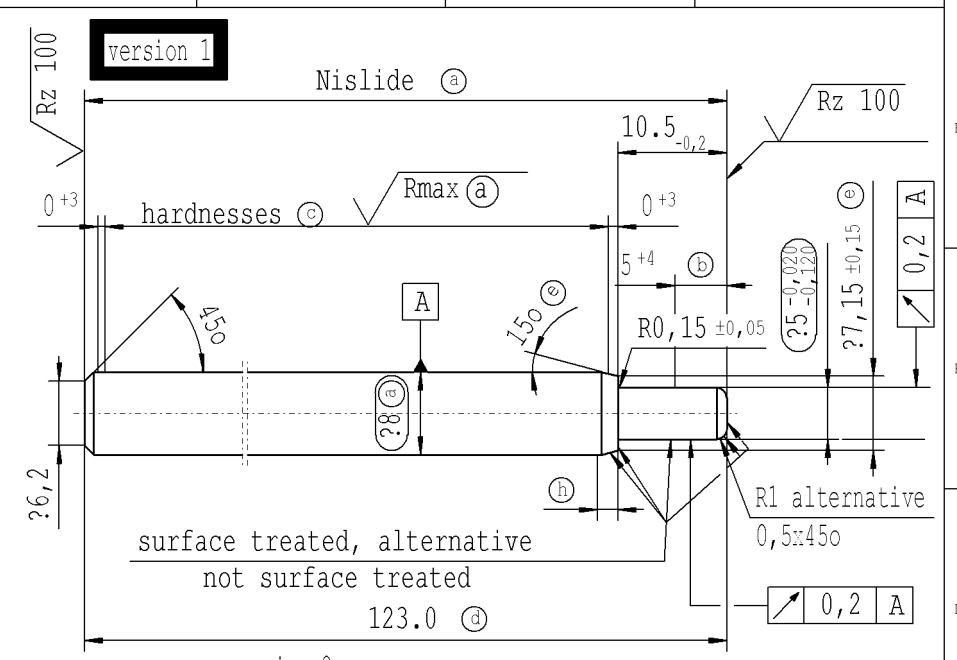

version 2

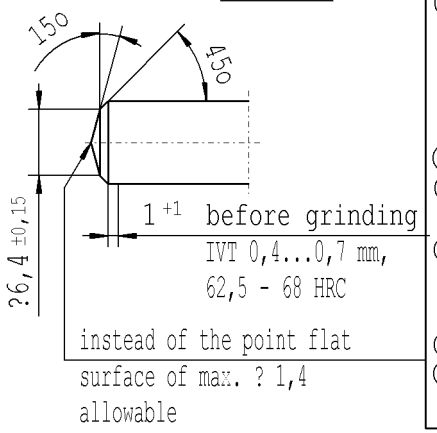

ⓐ piston rod processing acc. to STAB-Spec. 10006248

for piston rods without surface treatment
grinding dimension $^{-0,046}_{-0,057}$
Rmax after grinding ≤ 1,5 µm

ⓑ surface chrome-free

ⓒ RHT 0,4..0,7 mm before grinding, ≥ 68 HRA (acc. to DIN ISO 6508)

ⓓ tolerances: $^{+0,2}_{-0,1}$ after turning
±0,3 after straightening
±0,3 after chroming/nisliding

ⓔ assy. chamfer only for stud length 10,5 and 11,0 mm

ⓗ max. 2 mm chrome-free qualified layer thickness, no test range

Rz 25 (Rz 100 Rmax ⓐ) +0,2 -0,2

sheet 1 of 9

AIAG CQI-standards acc. to STAB-Spec. 10027692

Environmental protection acc. to STAB-Spec. 10005649

DE: X | EN: X | ES: X | IT: | PR: | FR: | RO: | CAD created document handwritten changes not permitted

new	surface treated ...	.2802YL Tab4+10	0,5x45o alternative R1	R1 alternative 0,5x45o	chrome DOK 102144D1	Tab.XVI
old	-	Tab4	0,5x45o	0,5x45o alternative R1	-	-
Field	D-E/1-3	Pos.261	D-E/1	D-E/1	Pos 78;90;115;137;185	-
Date/Name	23.05.2006 Sch?nberger	21.11.06 H?fer	28.05.2008 Hein	19.03.2009 Hein	06 08 2014 Häfer	07.10.2015 H?fer
Chg. No.	550622	553536	565550	571413	615932	629279
Rev.	44	45	46	47	48	49

Material: mat.no. 010731

Edge tolerances acc. to DIN ISO 13715

Surface finish DIN EN ISO 1302

Replaces:

Zchng. gl. Nr. v. 01.07.1997

STABILUS

All dimensions are in mm

Scale: (Original DIN A3) 2:1

Identification of important characteristics

Dimensions without tolerances DIN ISO 2768-mK

We reserve all rights to this document, to any patents or patent registrations related hereto, and to the duplication, retransmission by third parties and misc. use. Any use of this document is not permitted without the written consent of STABILUS.

PISTON ROD

	Date	Name
Drawn by	23.11.1999	Mohrs
Checked	07.10.2015	Milles

Document No.: 10003762

Material No.:

Ident. Doc.: SN 53.11-010/13 Datum: 22/10/2015 - 8:7