© AL-KO - The reproduction, distribution and utilization of this document as well as the communication of its contents to others without explicid authorization is prohibited.
Offenders will be held liable for the payment of damages. All rights reserved in the event of the grant of a patent, utility model or design.

Detail A
M 5:1

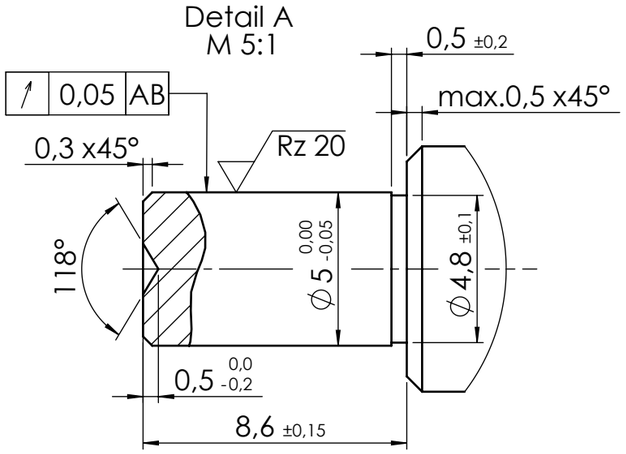

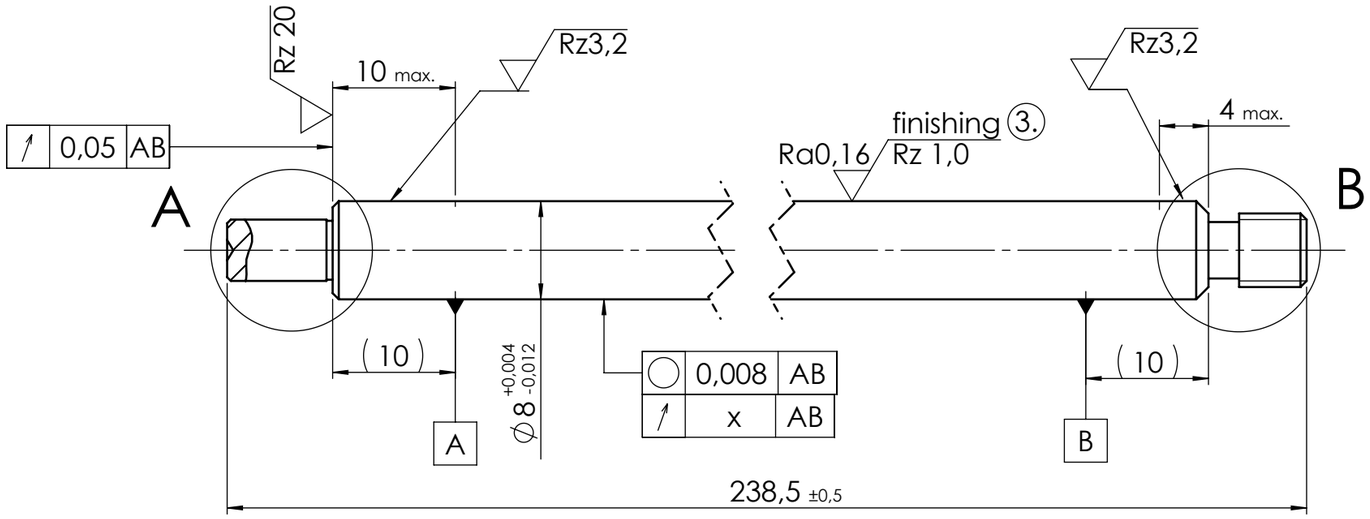

Detail B
M 5:1

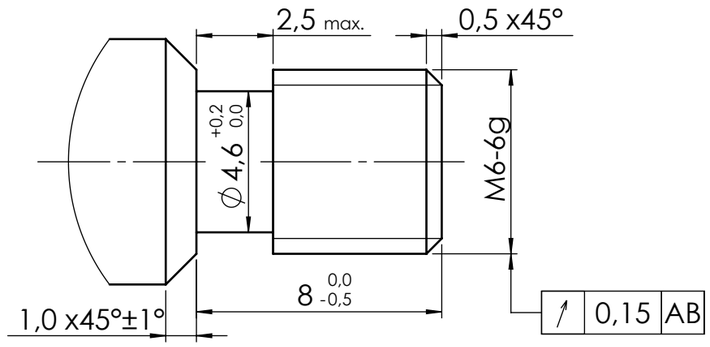

1. material: rod DIN EN 10278-8,3h9 EN10277-2 -C45 (1.0503 acc. EN10083-2)
   crack depth max. 0,15; base size Ø8,3 h9

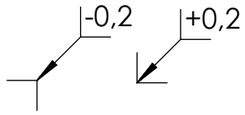

2. (Rz 80 , Rz 20 , Rz 3,2 , Rz 1,0)

3. material percentage contact area M_r =50 - 70%

   - measured at cutting depth c =0,5*Rz and reference line $c_{ref.}$ =0%

4. surface protection:
   - salt bath nitriding (thickness 15 µm minimum)
   - finishing

5. corrosion resistance:
   - minimum 144hrs salt spray test (NSS-test)according DIN EN ISO 9227

   - validation according DIN EN ISO 10289 degree of protection R_P=10

6. accuracy class of screw thread after nitriding: acceptable up to 6h

7. horizontal displacement/ concentricity (dimension x): see table Nr.1

PDM-Status:

table Nr.1

length of piston rod L	dimension x
up to150	0,10
over 150 up to 200	0,15
over 200 up to 250	0,20
over 250 up to 300	0,25
over 300	0,30

table Nr.2

current lengths of piston rod L	78 - 364
favoured lengths of piston rod L	70 - 400

Vers.	Issue	Modification Text

surface acc. EN ISO 1302	tolerance acc. DIN ISO 2768 m	material	standart	Raw Material	Standard	Material-No.
		SEE TEXT INDICATION				

Vers.	Issue	Mod.-Nr.	Date	Name	weight 0,039 KG	created by: RILK	Date: 28.01.2015

Project:

Description
PISTON ROD CC8X238,5

AL-KO DÄMPFUNGSTECHNIK
09661 Rossau

Material-No. **673586**

Class.-No.

Scale 2:1 | Sh.-No. 2 | No.of Sh. 2 | Format A3

Origin | Repl. for | Repl. by

673586_PISTON ROD CC8X238,5 / Mittwoch, 4. November 2015 12:56:55

Vorlage Vers. 4.3.1 / 14.07.2005