CONFIDENTIAL!
Intended for internal use only

EN

supp. No.	material no. surface treatment processing acc. to STAB-Spec. 10006248 Tab. IV	10006248 Tab. X	10028959 Tab.I China pay part	A overall length	E length without endfitting stud	F version
1	240205	240205	240205	201	191.5	1
2	483509	483509	483509	303	293.5	1
3	425445	425445	425445	102	92.5	1
4	425684	425684	425684	300	290.5	1
5	426162	426162	426162	402	392.5	1
6	426401	426401	426401	501	491.5	1
7	426640	426640	426640	600	590.5	1

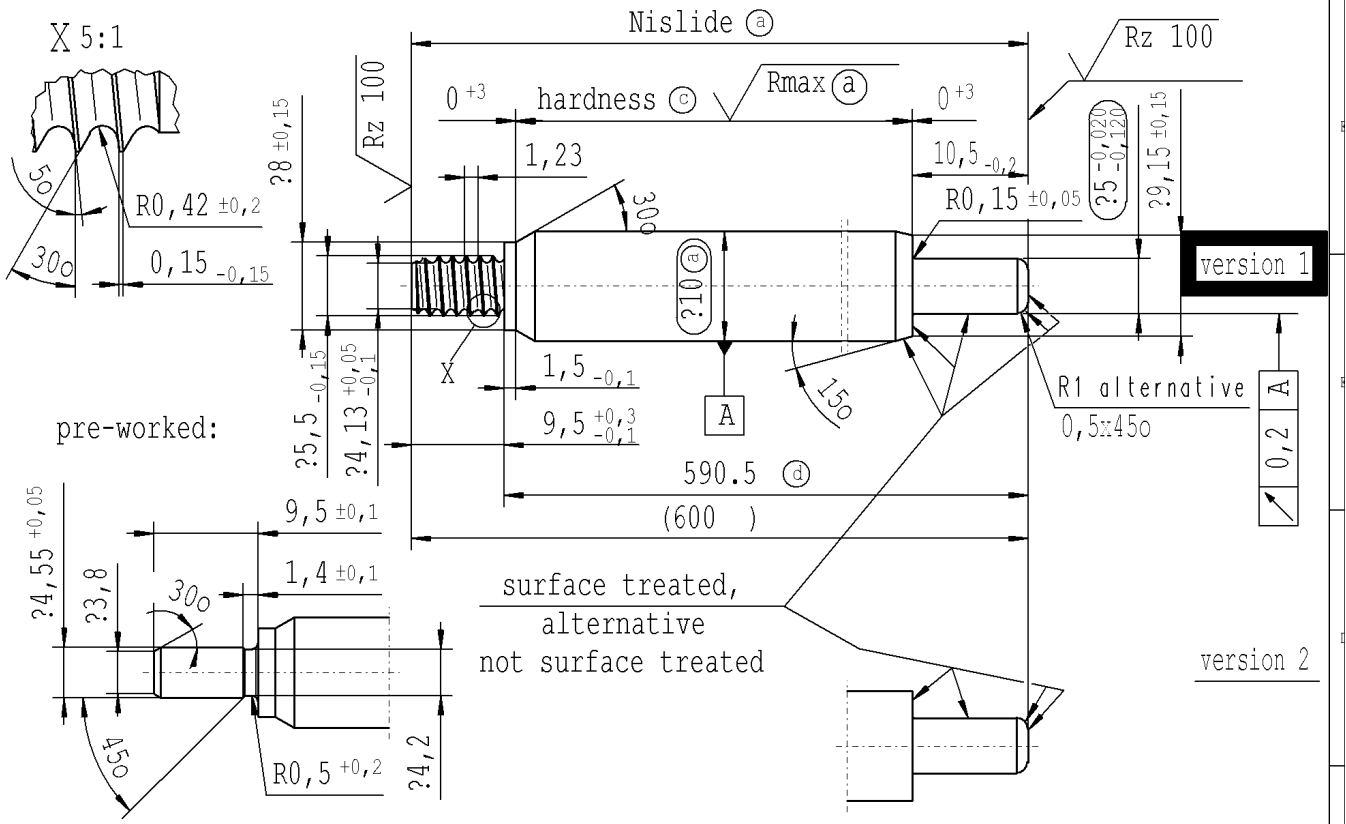

Production Stabilus

ⓐ piston rod processing acc. to STAB-Spec. 10006248

ⓒ RHT 0,4..0,7 mm before grinding, ≥ 68 HRA (acc. to DIN ISO 6508)

ⓓ tolerances: $^{+0,2}_{-0,1}$ after turning
±0,3 after straightening
±0,3 after nisliding

Pay part China acc separate Supplier-drawing

for pay part China product family: 2012/0337 approved lengths: 100 - 600 mm

+0,2 -0,2

* only Tab. IV Rz 25 (Rz 100 Rmax ⓐ)

sheet 1 of 1

Environmental protection acc. to STAB-Spec. 10005649

DE: X	EN: X	ES:	IT:	PR:	FR:	RO:	CAD created document handwritten changes not permitted

new	INITIAL RELEASE	product family: 2012/0337, approved lengths: 100-600mm	
old	-	-	
Field	-	B-C/1-3	
Date/Name	26.04.2012 Geisbüsch	30.05.2012 Hein	
Chg. No.	-	597157	
Rev.	0	1	

Material: mat.no. 010715

Edge tolerances acc. to DIN ISO 13715

Surface finish DIN EN ISO 1302

Replaces:

STABILUS

All dimensions are in mm

Scale: (Original DIN A3) 2:1

Identification of important characteristics

Dimensions without tolerances DIN ISO 2768-mK

We reserve all rights to this document, to any patents or patent registrations related hereto, and to the duplication, retransmission by third parties and misc. use. Any use of this document is not permitted without the written consent of STABILUS.

PISTON ROD

	Date	Name
Drawn by	26.04.2012	Geisbüsch
Checked	30.05.2012	Klinkner

Document No.: 10188940

Material No.:

Ident. Doc.:

Ersteilldatum: 7/12/2015 - 14:1