The print-out is not subject to the modification service.
Intended for internal and supplier use
EN

ⓐ piston rod processing per STAB-Spec. 10028959, table 1

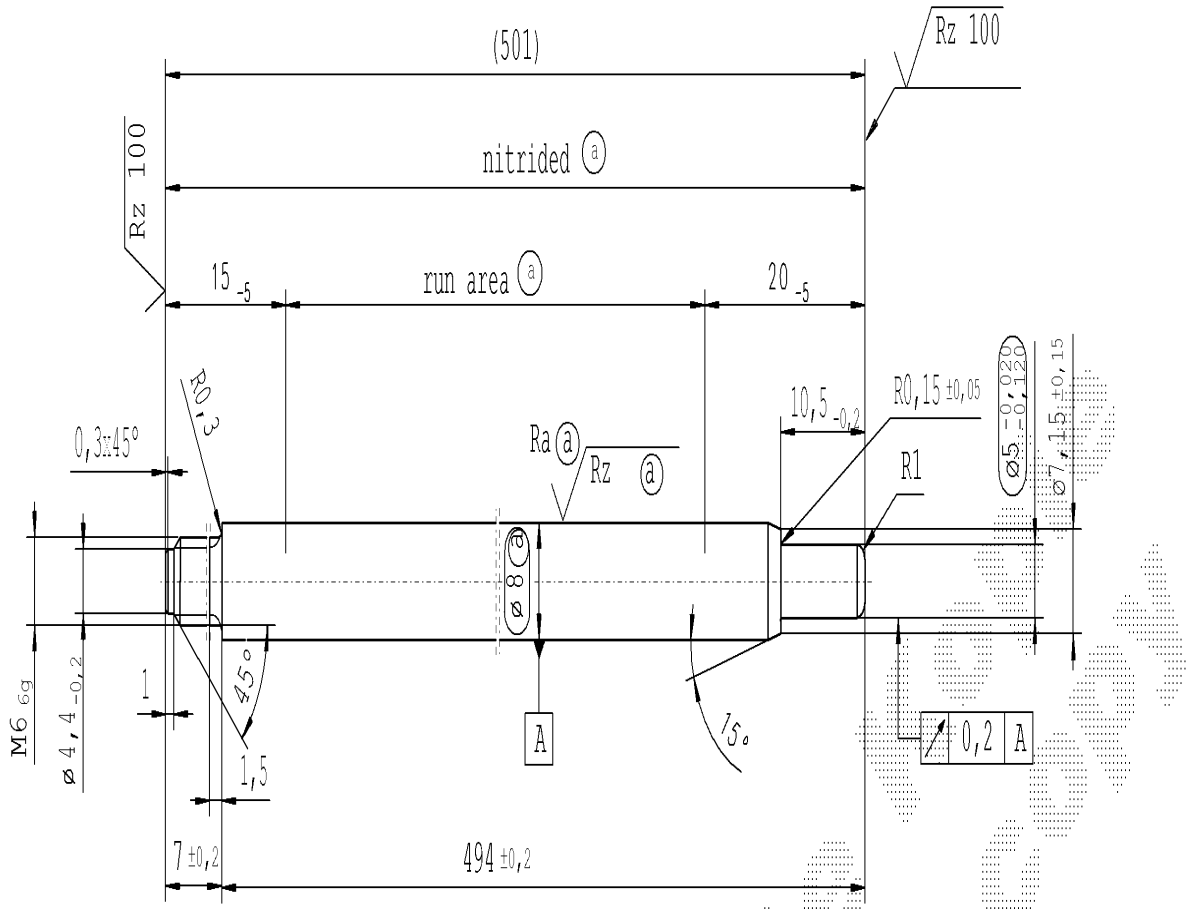

RELEASE
for supplier
company Zhang Shi
01.12.2015 Schilz A.
(date / signature)

thread tolerances acc. to DIN ISO 965-3

Rz 25 (Rz 100 Ra ⓐ Rz ⓐ) +0,2 -0,2

AIAG CQI-standards acc. to STAB-Spec. 10027692

Environmental protection acc. to STAB-Spec. 10005649

DE: X	EN: X	ES:	IT:	PR:	FR:	RO:	CAD created document; handwritten changes not permitted

new	INITIAL RELEASE
old	-
Field	-
Date/Name	01.12.2015 Kievernagel
Chg. No.	631289
Rev.	0

Material: 1.1193 S45C UNS G1051
Edge tolerances acc. to DIN ISO 13715
Surface finish: DIN EN ISO 1302
Replaces:

STABILUS

All dimensions are in mm
Identification of important characteristics
Scale: (Original DIN A3) 2:1
Dimensions without tolerances DIN ISO 2768-mK

We reserve all rights to this document, to any patents or patent registrations related hereto, and to the duplication, retransmission by third parties and misc. use. Any use of this document is not permitted without the written consent of STABILUS.

	Date	Name
Drawn by	01.12.2015	Kievernage
Checked	01.12.2015	Milles

Document No.: 10151863

PISTON ROD

Material No.: 449345

Ident. Doc.: L23