The print-out is not subject to the modification service.
Intended for internal and supplier use
EN

ⓐ piston rod processing per STAB-Spec. 10028959, table 1

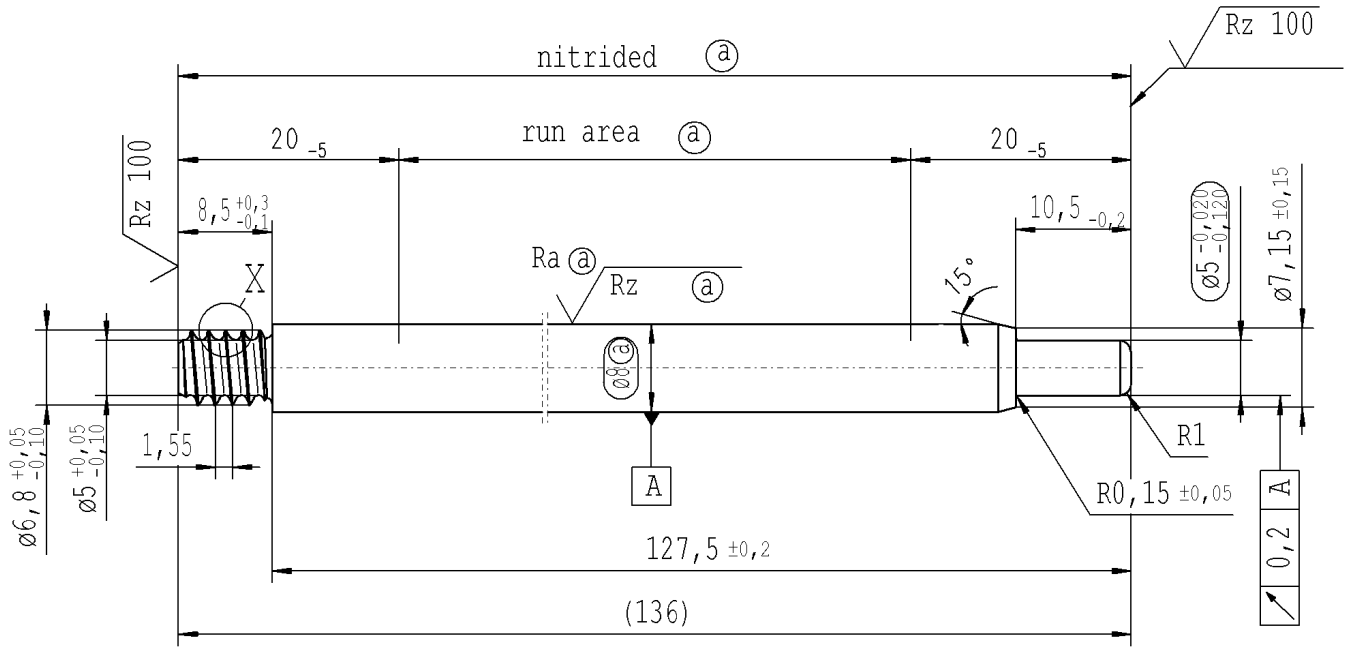

X 5:1

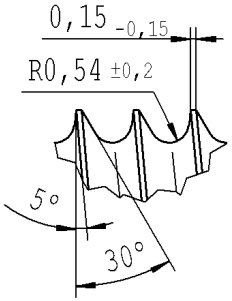

pre-worked:

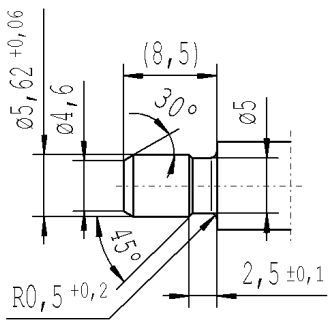

RELEASE
for supplier
company Zhang Shi
16.07.2015 Schilz A.
(date / signature)

Rz 25 (Rz 100 Ra ⓐ Rz ⓐ) +0,2 -0,2

AIAG CQI-standards acc. to STAB-Spec. 10027692

Environmental protection acc. to STAB-Spec. 10005649

DE: X	EN: X	ES:	IT:	PR:	FR:	RO:	CAD created document; handwritten changes not permitted
new	127,5 ±0,2		R1				
old	127,5		0,5x45°				
Field	D/4		E/2				
Date/Name	17.10.2012 Hein		15.07.2015 Hein				
Chg. No.	599668		624057				
Rev.	0		1				

Material: 1.1193 S45C JISG 4051
Edge tolerances acc. to DIN ISO 13715
Surface finish DIN EN ISO 1302
Replaces:

STABILUS

All dimensions are in mm
Identification of important characteristics
Scale: 2:1 (Original DIN A3)
Dimensions without tolerances DIN ISO 2768-mK

We reserve all rights to this document, to any patents or patent registrations related hereto, and to the duplication, retransmission by third parties and misc. use. Any use of this document is not permitted without the written consent of STABILUS.

	Date	Name
Drawn by	23.05.2011	K.Marx
Checked	15.07.2015	Klinkner

Document No.: 10151065

PISTON ROD

Material No.: 466295

Ident. Doc.: L158