The print-out is not subject to the modification service.
Intended for internal and supplier use
EN

ⓐ piston rod processing per STAB-Spec. 10028959, table 1

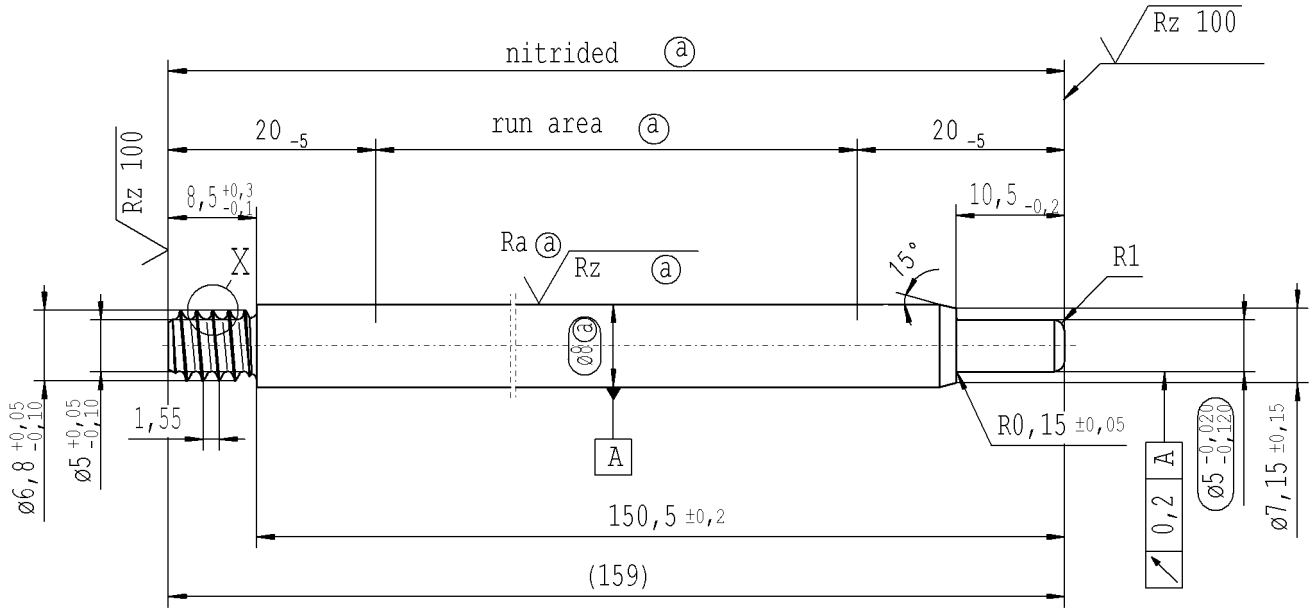

pre-worked:

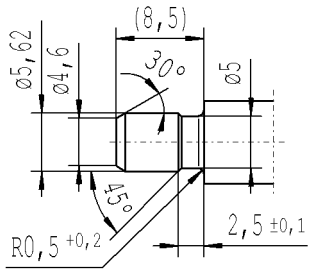

X 5:1

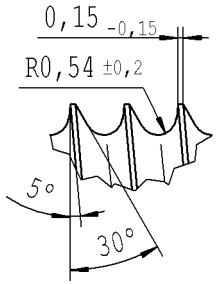

Rz 25 (Rz 100 Ra ⓐ Rz ⓐ) +0,2 -0,2

AIAG CQI-standards acc. to STAB-Spec. 10027692

Environmental protection acc. to STAB-Spec. 10005649

DE: X	EN: X	ES:	IT:	PR:	FR:	RO:	CAD created document; handwritten changes not permitted
new	INITIAL RELEASE						
old	-						
Field	-						
Date/Name	02.02.2016 Höfer						
Chg. No.	633327						
Rev.	0						

Ident. Doc.: L229

RELEASE
for supplier
company Zhang Shi
Dat. 02.02.2016 Schilz A.
(date / signature)

Material: 1.1193
S45C JISG 4051
annealing

Edge tolerances acc. to DIN ISO 13715
Surface finish DIN EN ISO 1302
Replaces:

STABILUS

All dimensions are in mm

Scale: (Original DIN A3) 2:1

Identification of important characteristics

Dimensions without tolerances DIN ISO 2768-mK

We reserve all rights to this document, to any patents or patent registrations related hereto, and to the duplication, retransmission by third parties and misc. use. Any use of this document is not permitted without the written consent of STABILUS.

	Date	Name
Drawn by	02.02.2016	Höfer
Checked	02.02.2016	Milles

Document No.: 10151065

Material No.: 111878

PISTON ROD