The print-out is not subject to the modification service.
Intended for internal and supplier use
EN

ⓐ piston rod processing per STAB-Spec. 10028959, table 1

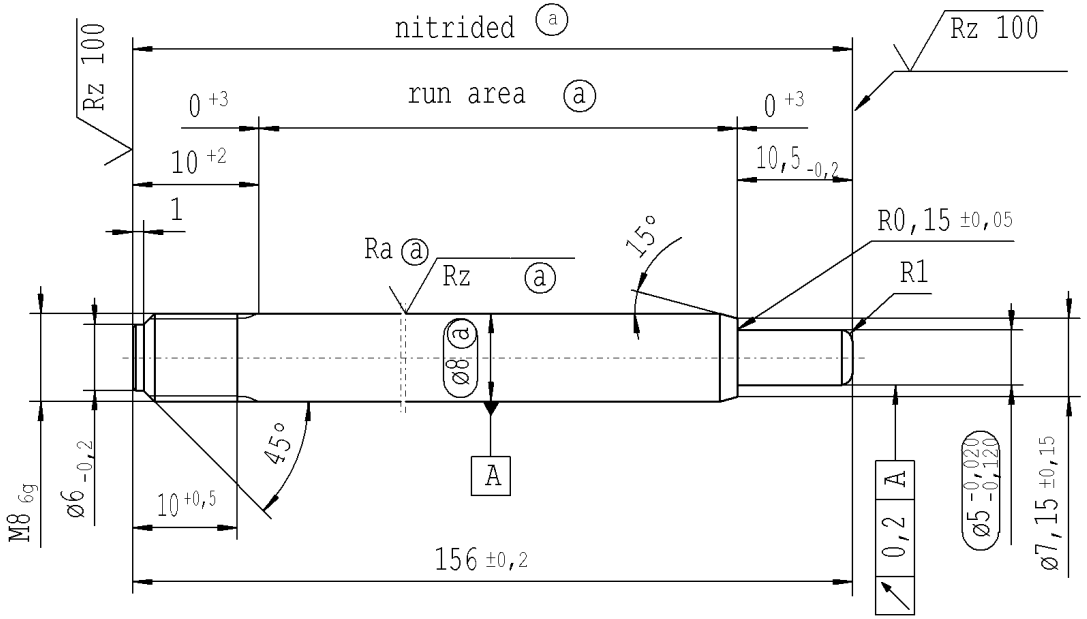


Rz 25 ( Rz 100 Ra ⓐ Rz ⓐ ) +0,2 -0,2

AIAG CQI-standards acc. to STAB-Spec. 10027692

Environmental protection acc. to STAB-Spec. 10005649

| DE: X | EN: X | ES: | IT: | PR: | FR: | RO: | CAD created document; handwritten changes not permitted |
|---|---|---|---|---|---|---|---|

| | |
|---|---|
| new | INITIAL RELEASE |
| old | - |
| Field | - |
| Date/Name | 11.04.2016 Jablonski |
| Chg. No. | 636370 |
| Rev. | 0 |

RELEASE
for supplier
company Zhang Shi
Dat. 11.04.2016 Schilz A.
(date / signature)

Material: 1.1193
S45C JISG 4051
Edge tolerances acc. to DIN ISO 13715
Surface finish DIN EN ISO 1302
Replaces:

STABILUS

All dimensions are in mm
Scale: (Original DIN A3) 2:1
Identification of important characteristics
Dimensions without tolerances DIN ISO 2768 mK

We reserve all rights to this document, to any patents or patent registrations related hereto, and to the duplication, retransmission by third parties and misc. use. Any use of this document is not permitted without the written consent of STABILUS.

PISTON ROD

| | Date | Name |
|---|---|---|
| Drawn by | 11.04.2016 | Jablonski |
| Checked | 11.04.2016 | Milles |

Document No.: 10210124
Material No.: 545663

Ident. Doc.: L10

***** Druckdatum: 4/12/2016 / 1:17:16 PM ***** Ausdruck nicht massgetreu *****