ⓐ piston rod processing per STAB-Spec. 10028959, table 1

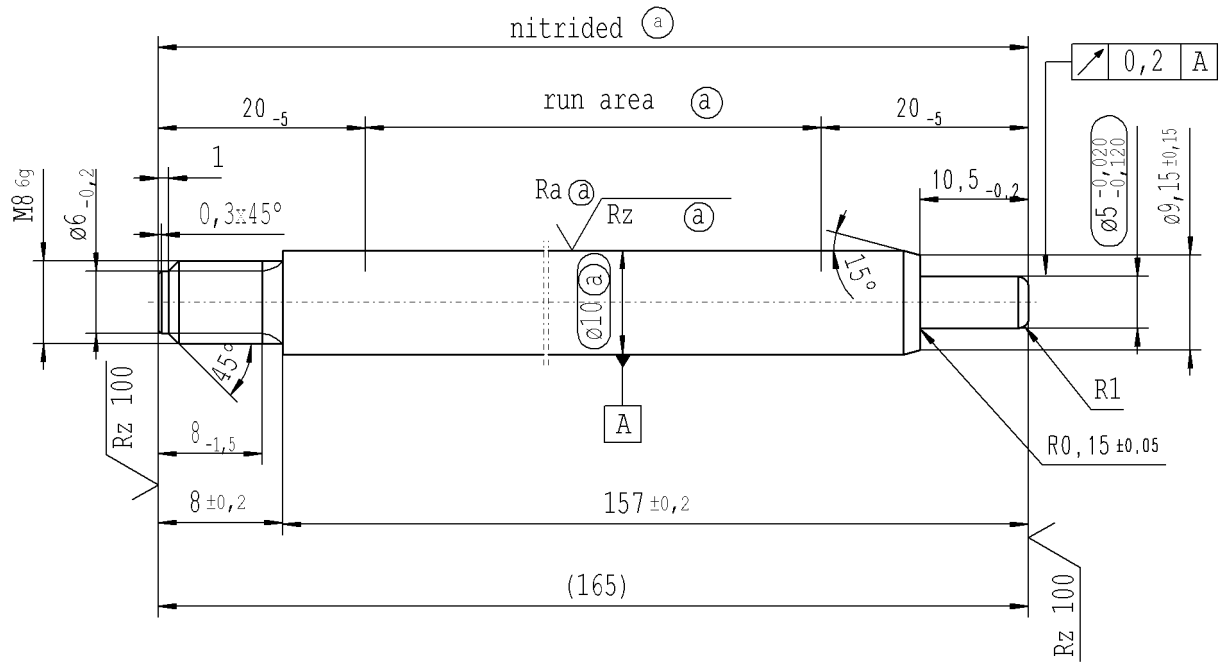

thread tolerances acc. to DIN ISO 965-3

Rz 25 (Rz 100 Ra ⓐ Rz ⓐ) +0,2 -0,2

AIAG CQI-standards acc. to STAB-Spec. 10027692

Environmental protection acc. to STAB-Spec. 10005649

DE: X	EN: X	ES:	IT:	PR:	FR:	RO:	CAD created document; handwritten changes not permitted
new	INITIAL RELEASE						
old	-						
Field	-						
Date/Name	03.03.2017 Höfer						
Chg. No.	653500						
Rev.	0						

RELEASE for supplier
company Zhang Shi
Dat. 03.03.2017 Schilz A.
(date / signature)

Material: 1.1193 S45C JISG 4051
Edge tolerances acc. to DIN ISO 13715
Surface finish DIN EN ISO 1302
Replaces:

STABILUS

All dimensions are in mm
Scale: (Original DIN A3) 2:1
Identification of important characteristics
Dimensions without tolerances DIN ISO 2768-mK

We reserve all rights to this document, to any patents or patent registrations related hereto, and to the duplication, retransmission by third parties and misc. use. Any use of this document is not permitted without the written consent of STABILUS.

PISTON ROD

	Date	Name
Drawn by	03.03.2017	Höfer
Checked	03.03.2017	Milles

Document No.: 10166619
Material No.: 187646

The print-out is not subject to the modification service.
Intended for internal and supplier use
EN
Ident. Doc.: 158
***** Druckdatum: 3/3/2017 / 1:26:56 PM ***** Ausdruck nicht massgetreu *****