The print-out is not subject to the modification service.
Intended for internal and supplier use
EN

ⓐ piston rod processing per STAB-Spec. 10028959, table 1

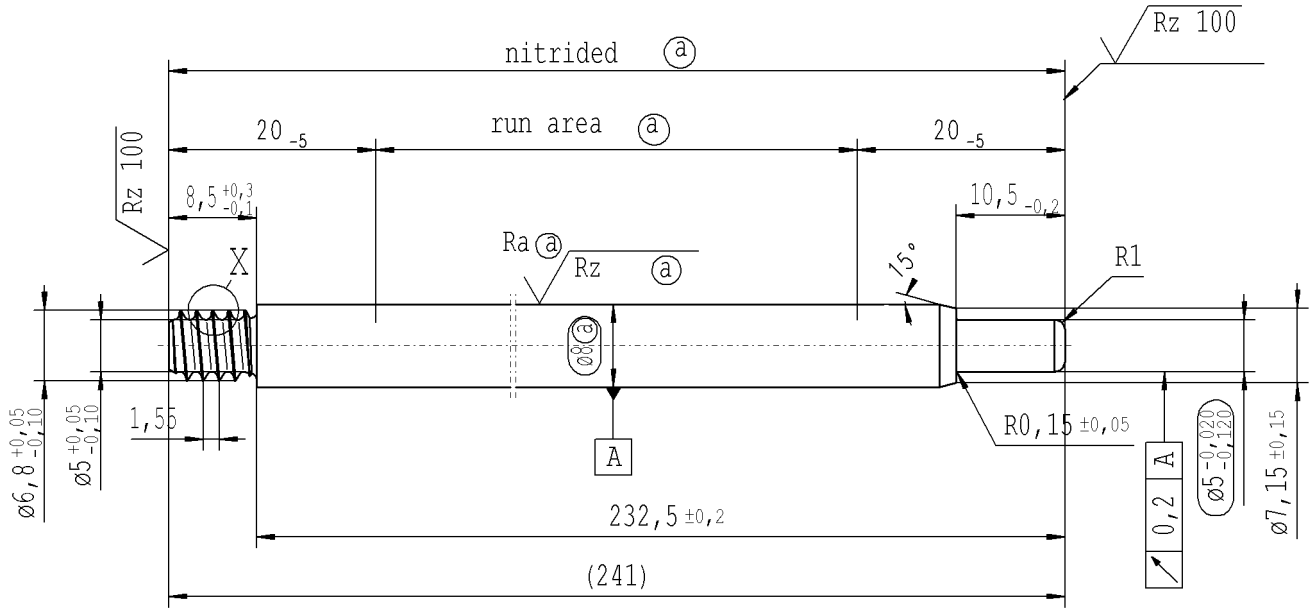

pre-worked:

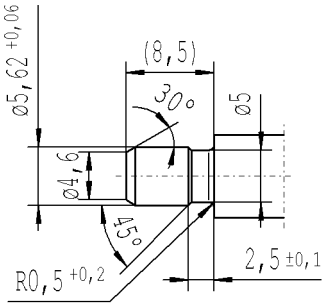

X 5:1

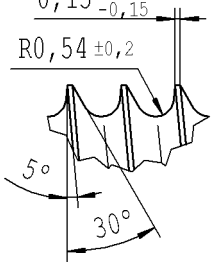

Rz 25 (Rz 100 Ra ⓐ Rz ⓐ) +0,2 -0,2

AIAG CQI-standards acc. to STAB-Spec. 10027692

Environmental protection acc. to STAB-Spec. 10005649

DE: X	EN: X	ES:	IT:	PR:	FR:	RO:	CAD created document; handwritten changes not permitted

Ident. Doc.: L02		
new	INITIAL RELEASE	10243257
old	-	10151065
Field	-	-
Date/Name	28.03.2017 Jablonski	31.03.2017 Jablonski
Chg. No.	654821	655001
Rev.	0	1

RELEASE
for supplier
company Zhang Shi
Dat. 31.03.2017 Schilz A.
(date / signature)

Material: 1.1193
S45C JISG 4051
Edge tolerances acc. to DIN ISO 13715
Surface finish DIN EN ISO 1302
Replaces:

STABILUS

All dimensions are in mm
Scale: (Original DIN A3) 2:1
Identification of important characteristics
Dimensions without tolerances DIN ISO 2768-mK

We reserve all rights to this document, to any patents or patent registrations related hereto, and to the duplication, retransmission by third parties and misc. use. Any use of this document is not permitted without the written consent of STABILUS.

PISTON ROD

	Date	Name
Drawn by	28.03.2017	Jablonski
Checked	31.03.2017	Milles

Document No.: 10243257
Material No.: 349210

***** Druckdatum: 03.04.2017 / 13:23:23 ***** Ausdruck nicht massgetreu *****