ⓐ piston rod processing per STAB-Spec. 10028959, table 1

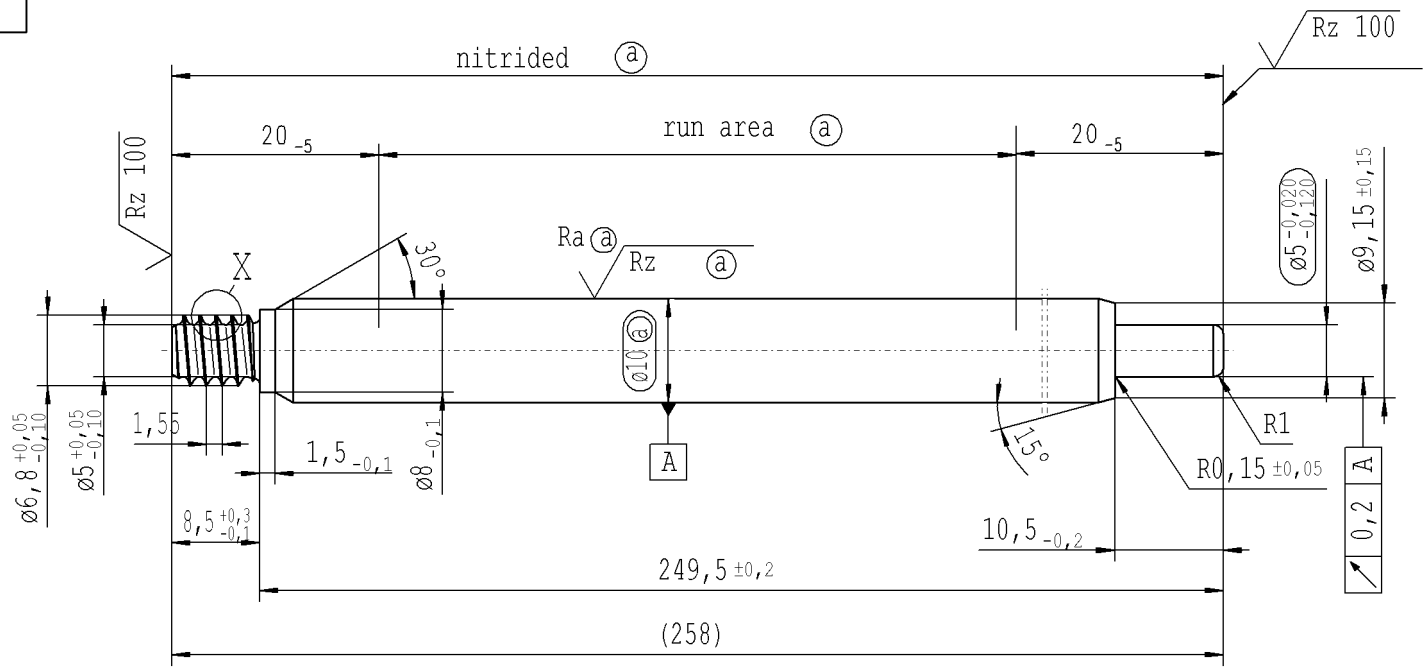

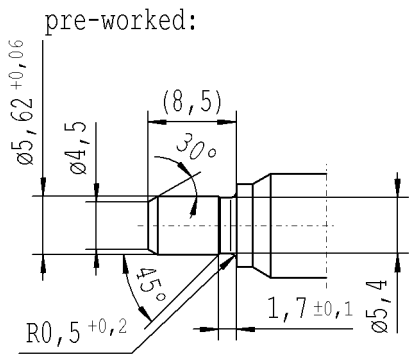

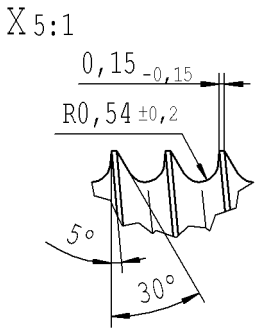

Rz 25 (Rz 100 Ra ⓐ Rz ⓐ) +0,2 -0,2

AIAG CQI-standards acc. to STAB-Spec. 10027692

Environmental protection acc. to STAB-Spec. 10005649

DE: X	EN: X	ES:	IT:	PR:	FR:	RO:	CAD created document; handwritten changes not permitted

new	INITIAL RELEASE
old	-
Field	-
Date/Name	07.01.2017 Höfer
Chg. No.	652082
Rev.	0

RELEASE for supplier
company ZhangShi
Dat. 07.02.2017 Schilz A.
(date / signature)

Material: 1.1193 S45C JISG 4051
Edge tolerances acc. to DIN ISO 13715
Surface finish DIN EN ISO 1302
Replaces:

STABILUS

All dimensions are in mm
Scale: (Original DIN A3) 2:1
Identification of important characteristics
Dimensions without tolerances DIN ISO 2768 mK

We reserve all rights to this document, to any patents or patent registrations related hereto, and to the duplication, retransmission by third parties and misc. use. Any use of this document is not permitted without the written consent of STABILUS.

PISTON ROD

	Date	Name
Drawn by	07.02.2017	Höfer
Checked	07.02.2017	Milles

Document No.: 10151520
Material No.: 432382

The print-out is not subject to the modification service.
Intended for internal and supplier use
EN
L68
Ident. Doc.:

***** Druckdatum: 2/7/2017 / 4:18:29 PM ***** Ausdruck nicht massgetreu *****