CONFIDENTIAL! Intended for internal use only

EN

supp. No.	material no. surface treatment processing acc. to STAB-Spec. 10006248 Tab. IV	table V Nislide light	10006248 Tab. X	10028959 Tab.I ZhangShi	A overall length	E length without endfitting stud
258	780366		780366	780366	120.0	111.5
259	871903		871903	871903	125.5	117.0
260	275838		275838	275838	351.0	342.5
261	278945		278945	278945	167.0	158.5
262	290178		290178	290178	184.0	175.5
263	536587		536587	536587	282.0	273.5

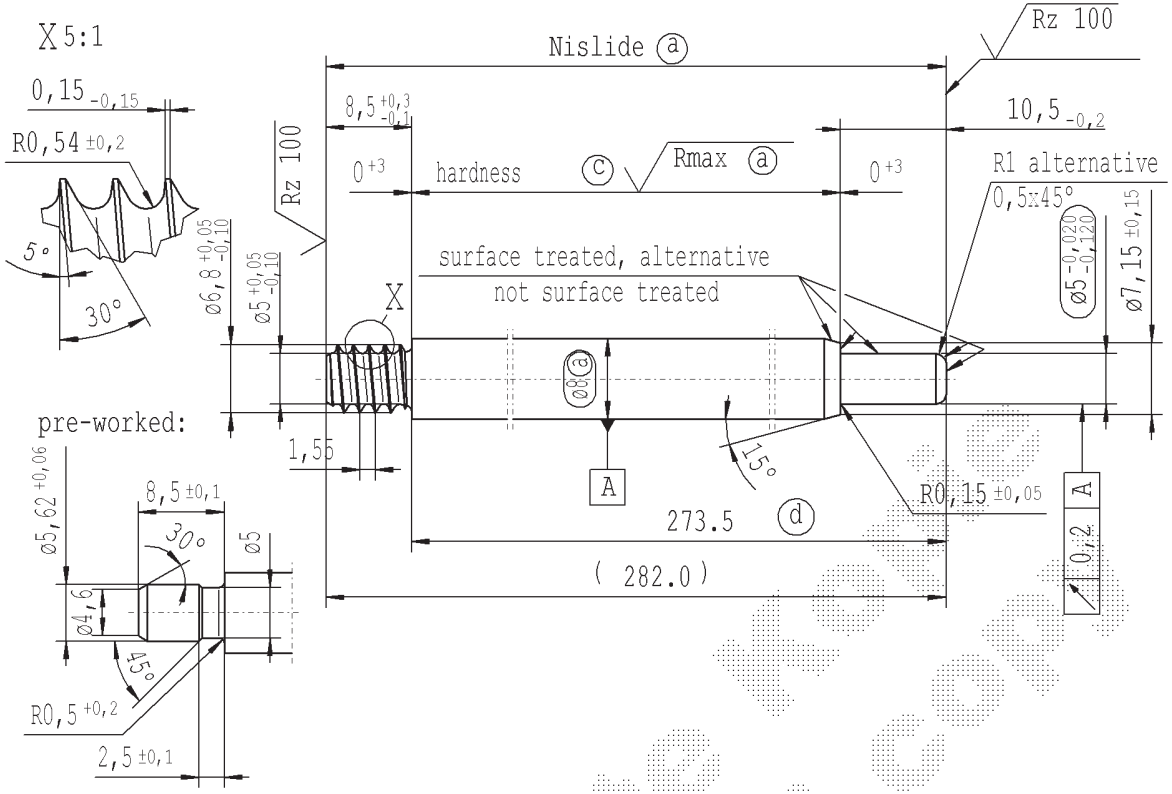

Production Stabilus

ⓐ piston rod processing acc. to STAB-Spec. 10006248

ⓒ RHT 0,4..0,7 mm before grinding, ≥ 68 HRA (acc. to DIN ISO 6508)

ⓓ tolerances: +0,2 -0,1 after turning
±0,3 after straightening
±0,3 after nislidng

Pay part China acc.separate Supplier drawing

ZhangShi
product family: 2008/0028
approved lengths:
100-600 mm

* only Tab. IV

+0,2 -0,2

Rz 25 (Rz 100 Rmax ⓐ)

Environmental protection acc. to STAB-Spec. 10005649

sheet 9 of 9

DE: X	EN: X	ES:	IT:	PR: X	FR:	RO: X	CAD created document handwritten changes not permitted

new	approved lengths: 100-600mm	Creation of romanian drawing	2014/0936	10242718
old	approved lengths: 100-450mm	-	2014/0542	Rifa
Field	B/2	-	B-C/1-2	-
Date/Name	24.11.2015 Hein	11.04.2016 YaMueller	18.07.2016 Höfer	10.03.2017 Höfer
Chg. No.	630576	635494	641467	653770
Rev.	14	15	16	17

Material: mat.no. 010731

Edge tolerances acc. to DIN ISO 13715
Surface finish DIN EN ISO 1302
Replaces:

STABILUS

All dimensions are in mm

Scale: (Original DIN A3) 2:1

Identification of important characteristics

Dimensions without tolerances DIN ISO 2768-mK

We reserve all rights to this document, to any patents or patent registrations related hereto, and to the duplication, retransmission by third parties and misc. use. Any use of this document is not permitted without the written consent of STABILUS.

	Date	Name
Drawn by	05.12.2007	Höfer
Checked	10.03.2017	Milles

Document No.: 10151065

Material No.:

PISTON ROD

Ident. Doc.:

Bestelldatum: 19/7/2017 - 10:6