CONFIDENTIAL!
Intended for internal use only

EN

supp. No.	material no. China pay part surface treatment STAB-Spec.10028959 Nislide Tab.I	A overall length	B stud length piston side
1	137212	162	9.5
2	138168	165	9.5
3	138646	150	9.5
4	326268	108	9.5

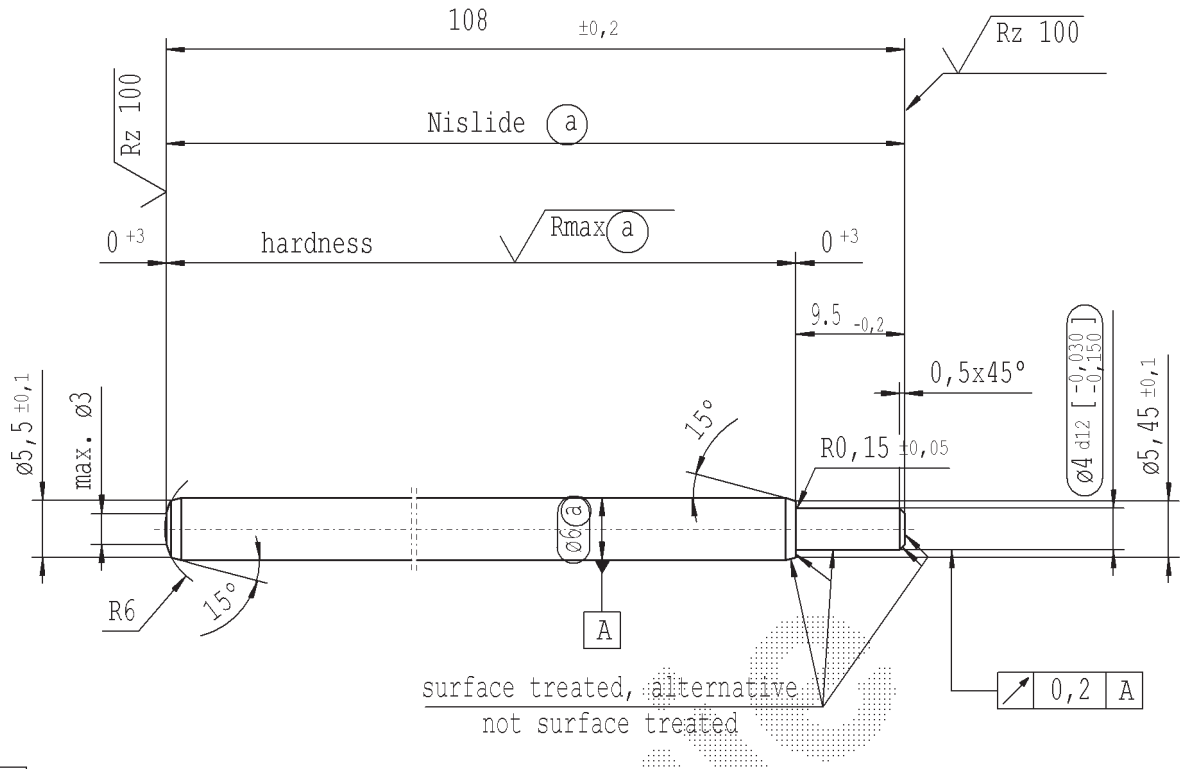

Pay part China
acc separate
Supplier-
drawing

for pay part China
product family: 2016/0280
approved lengths: 50-600 mm

+0,2 -0,2 Rz 25 (Rz 100 Rmax (a))

sheet 1
of 1

Environmental protection acc. to STAB-Spec. 10005649

DE: X	EN: X	ES:	IT:	PR:	FR:	RO: X	CAD created document handwritten changes not permitted

Ident. Doc.:			
new	INITIAL RELEASE	2016/0280	50-600mm
old	-	XXXX/xxxx	XXX-XXX
Field	-	AB/5-6	
Date/Name	03.02.2016 Höfer	22.03.2016 Höfer	
Chg. No.	-	635617	
Rev.	0	1	

Material: mat. no. 010707
Edge tolerances acc. to DIN ISO 13715
Surface finish DIN EN ISO 1302
Replaces:

STABILUS

All dimensions are in mm
Scale: (Original DIN A3) 2:1
Identification of important characteristics
Dimensions without tolerances DIN ISO 2768-mK

We reserve all rights to this document, to any patents or patent registrations related hereto, and to the duplication, retransmission by third parties and misc. use. Any use of this document is not permitted without the written consent of STABILUS.

PISTON ROD

	Date	Name
Drawn by	03.02.2016	Höfer
Checked	22.03.2016	Mauer

Document No.: 10230758
Material No.:

Erstelldatum: 25/10/2017 - 10:51