The print-out is not subject to the modification service.
Intended for internal and supplier use
EN

(a) piston rod processing per STAB-Spec. 10028959 tab.I

Note : Diameter tolerance deviation!!

100% cleanliness of through hole

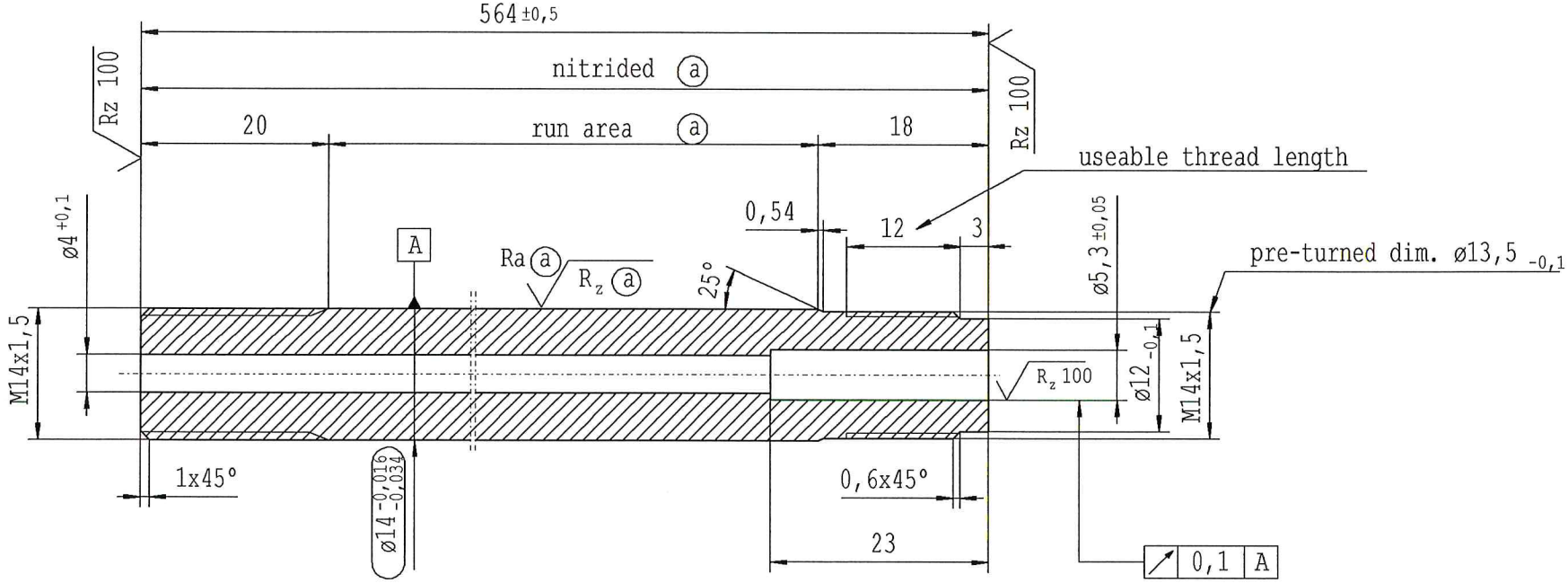

+0,4 +0,05 | -0,2 -0,05

Rz 25 (Rz 100 Ra (a) Rz (a))

AIAG CQI-standards acc. to STAB-Spec. 10027692

Environmental protection acc. to STAB-Spec. 10005649

DE: X	EN: X	ES:	IT:	PR:	FR:	RO:	CAD created document; handwritten changes not permitted
new	INITIAL RELEASE						
old	-						
Field	-						
Date/Name	28.11.2017 Hein						
Chg. No.	-						
Rev.	0						

Ident. Doc.: L01

RELEASE for supplier
company Zhang Shi
Dat. 28.11.2017 Schilz A.
(date / signature)

Material: 1.1193 S45C JISG 4051
Edge tolerances acc. to DIN ISO 13715
Surface finish DIN ISO 1302
Replaces:

STABILUS

All dimensions are in mm
Scale: (Original DIN A3) 2:1
Identification of important characteristics
Dimensions without tolerances DIN ISO 2768-mK

We reserve all rights to this document, to any patents or patent registrations related hereto, and to the duplication, retransmission by third parties and misc. use. Any use of this document is not permitted without the written consent of STABILUS.

	Date	Name
Drawn by	28.11.2017	Höfer
Checked	28.11.2017	Klinkner

Document No.: 10250415

PISTON ROD

Material No.: 285640