The print-out is not subject to the modification service.

Intended for internal and supplier use

EN

ⓐ piston rod processing per STAB-Spec. 10028959, table 1

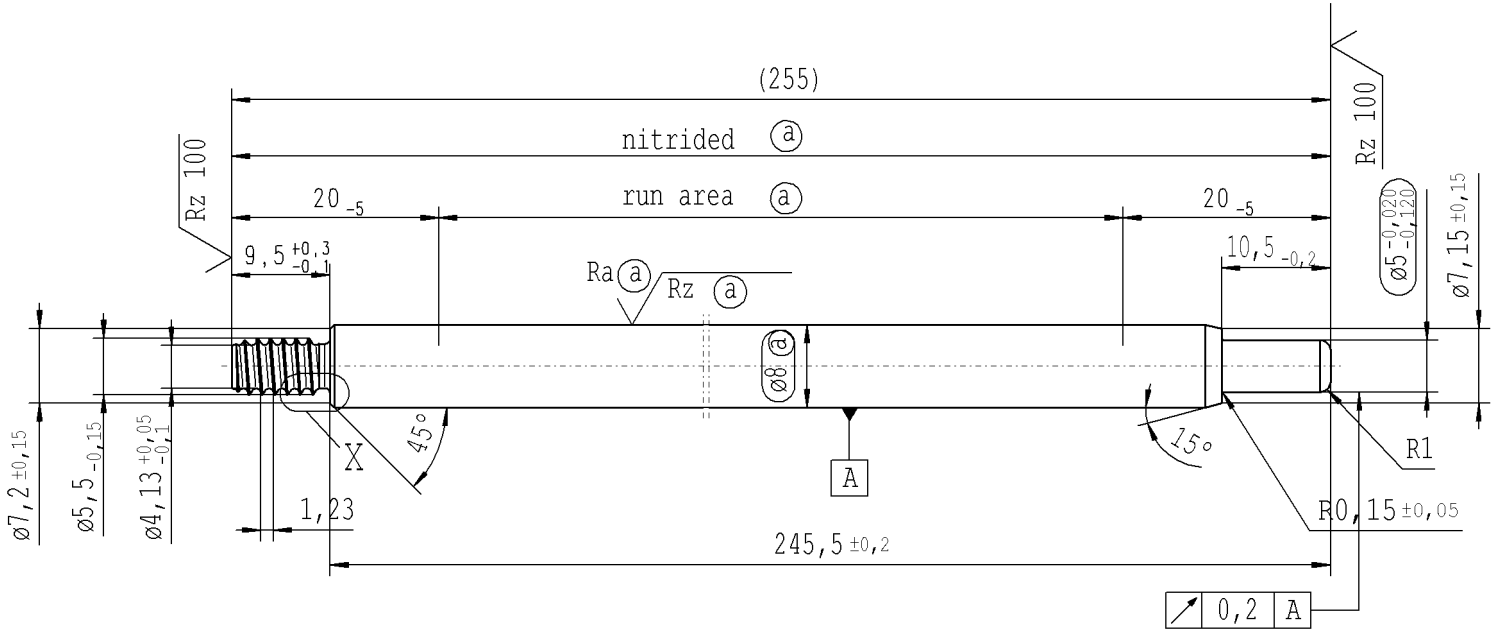

pre-worked:

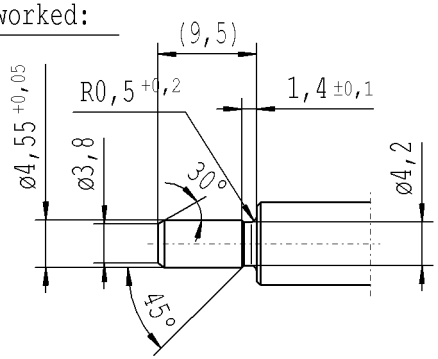

X 5:1

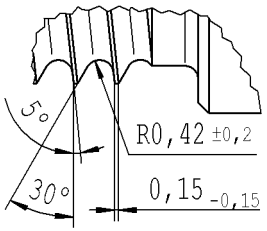

Rz 25 (Rz 100 Ra ⓐ Rz ⓐ) +0,2 -0,2

AIAG CQI-standards acc. to STAB-Spec. 10027692

Environmental protection acc. to STAB-Spec. 10005649

DE: X	EN: X	ES:	IT:	PR:	FR:	RO:	CAD created document; handwritten changes not permitted

Ident. Doc.: L02	
new	INITIAL RELEASE
old	-
Field	-
Date/Name	01.06.2018 Höfer
Chg. No.	668935
Rev.	0

RELEASE for supplier

company Zhang Shi

Dat. 04.06.2018 Schilz A.

(date / signature)

Material: 1.1193 S45C JISG 4051

Edge tolerances acc. to DIN ISO 13715

Surface finish DIN EN ISO 1302

Replaces:

STABILUS

All dimensions are in mm

Scale: (Original DIN A3) 2:1

Identification of important characteristics

Dimensions without tolerances DIN ISO 2768-mK

We reserve all rights to this document, to any patents or patent registrations related hereto, and to the duplication, retransmission by third parties and misc. use. Any use of this document is not permitted without the written consent of STABILUS.

PISTON ROD

	Date	Name
Drawn by	01.06.2018	Höfer
Checked	04.06.2018	Milles

Document No.: 10254976

Material No.: 956275