THE INFORMATION CONTAINED IN THIS DRAWING IS THE SOLE PROPERTY OF SUSPA INCORPORATED. ANY REPRODUCTION IN PART OR AS A WHOLE WITHOUT THE WRITTEN PERMISSION OF SUSPA INCORPORATED IS PROHIBITED.

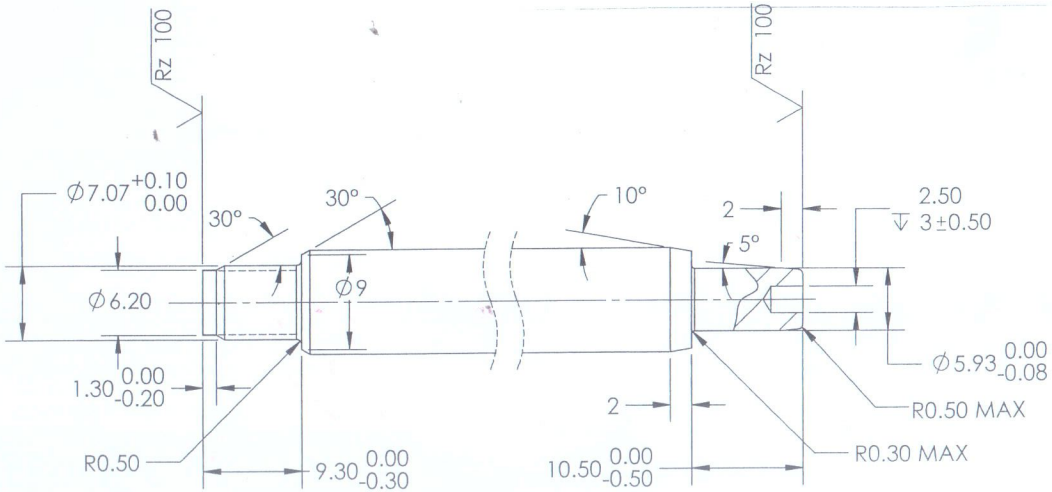

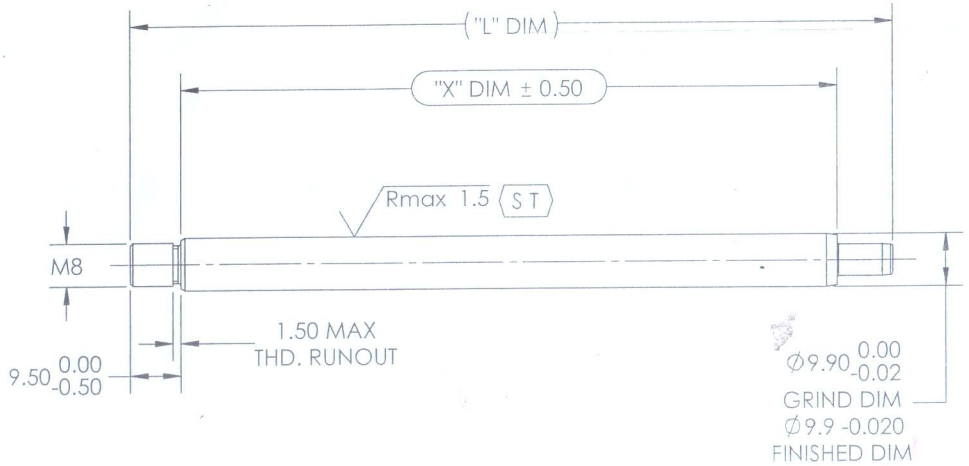

NOTES:

1. MUST BE CLEAN, FREE OF DEBRIS AND FREE OF BURRS.
2. NO IMPERFECTIONS ALLOWED IN AXIAL OR RADIAL DIRECTIONS.
3. (S T) = CRITICAL CHARACTERISTIC.
4. SALT BATH NITROCARBURIZED. CORROSION RESISTANCE TO BE >96HRS W/O RED RUST ACCORDING TO ASTM B117 IN "X" DIM AREA ONLY

CONTROLLED
MUST BE BLUE INK

DO NOT MANUFACTURE TO THIS DRAWING UNLESS IT IS MARKED "CONTROLLED"

DO NOT SCALE THIS DRAWING
DIMENSIONS ARE IN MILLIMETERS

TOLERANCES UNLESS OTHERWISE SPECIFIED

ONE PLACE DECIMAL	+/-0.2	ANGULAR	+/-2°
TWO PLACE DECIMAL	+/-0.1		

DRAWN BY	DATE	SCALE	THIRD ANGLE PROJECTION
RTA	4/17/2015	1:1	

SHEET: 1 OF 2

REV / ECN	REVISIONS	CHANGED BY	APPROVED BY	DATE (MM/DD/YR)
C196	REMOVED CHART ADDED SHEET 2	RTA	TSH	6/05/18
B280	REMOVED SURF ANNEAL		RTA	1/11/16
	RELEASED		RTA	7/2/15

DESCRIPTION: 10.0mm PISTON ROD

MATERIAL: C45 (DIN EN 10250-2)

DRAWING NUMBER: G51-0004

SUSPA INCORPORATED
3970 Roger B. Chaffee S.E.
Grand Rapids, Michigan 49548-3497
www.suspa-inc.com

DRAWING SIZE: B

PART NUMBER	L-DIMENSION	X-DIMENSION	STROKE	SURFACE
P51-00400	168.50	148.50	125	QP
P51-00401	243.50	223.50	200	QP
P51-00402	368.50	348.50	325	QP
P51-00403	453.50	433.50	410	QP
P51-00404	93.50	73.50	50	QP
P51-00405	108.50	88.50	65	QP
P51-00406	113.50	93.50	70	QP
P51-00407	118.50	98.50	75	QP
P51-00408	123.50	103.50	80	QP
P51-00409	128.50	108.50	85	QP
P51-00410	143.50	123.50	100	QP
P51-00411	153.50	133.50	110	QP
P51-00412	183.50	163.50	140	QP
P51-00413	193.50	173.50	150	QP
P51-00414	218.50	198.50	175	QP
P51-00415	258.50	238.50	215	QP
P51-00416	273.50	253.50	230	QP
P51-00417	293.50	273.50	250	QP
P51-00418	303.50	283.50	260	QP
P51-00419	318.50	298.50	275	QP
P51-00420	343.50	323.50	300	QP
P51-00421	393.50	373.50	350	QP
P51-00422	408.50	388.50	365	QP
P51-00423	420.50	400.50	377	QP
P51-00424	428.50	408.50	385	QP
P51-00425	493.50	473.50	450	QP
P51-00426	543.50	523.50	500	QP

DRAWING NUMBER

G51-0004

AWN BY	DATE	SCALE	
RTA	4/17/2015	NONE	THIRD ANGLE PROJECTION

HEET: 2 OF 2

SUSPA INCORPORATED
3970 Roger B. Chaffee S.E.
Grand Rapids, Michigan 49548-3497
www.suspa-inc.com

DRAWING SIZ

A