The print-out is not subject to the modification service.
Intended for internal and supplier use
EN

ⓐ piston rod processing per STAB-Spec. 10028959, table 1

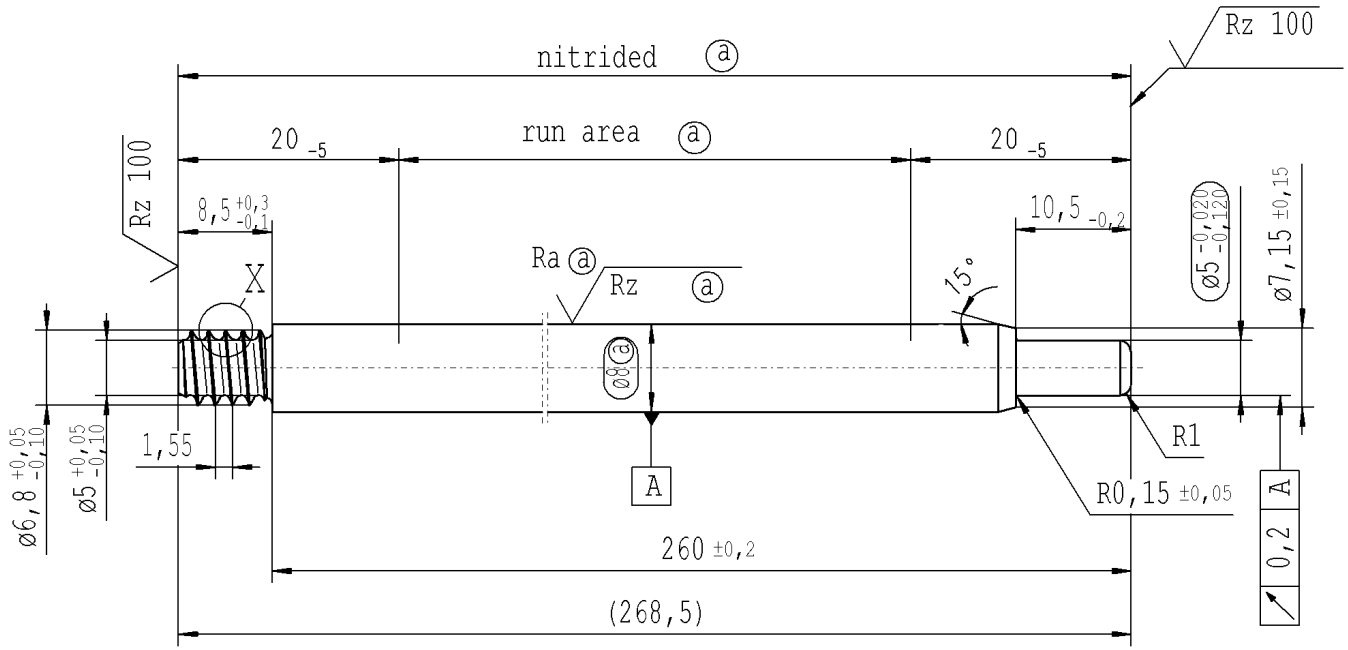

X 5:1

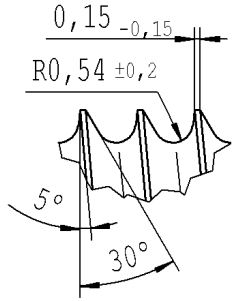

pre-worked:

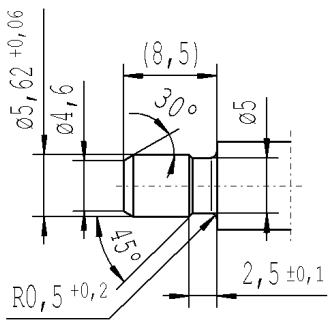

RELEASE
for supplier
company Zhang Shi
14.07.2015 Schilz A.
(date / signature)

Rz 25 (Rz 100 Ra ⓐ Rz ⓐ) +0,2 -0,2

AIAG CQI-standards acc. to STAB-Spec. 10027692

Environmental protection acc. to STAB-Spec. 10005649

DE: X	EN: X	ES:	IT:	PR:	FR:	RO:	CAD created document; handwritten changes not permitted
new	INITIAL RELEASE		run area		R1		
old	-		hardness		0,5x45°		
Field	-		F/4,5		E/2		
Date/Name	19.05.2008 Hein		28.07.2010 Geisbüsch		13.07.2015 Hein		
Chg. No.	-		581802		624057		
Rev.	0		1		2		

Material: 1.1193 S45C JISG 4051
Edge tolerances acc. to DIN ISO 13715
Surface finish DIN EN ISO 1302
Replaces:

STABILUS

All dimensions are in mm
Scale: 2:1 (Original DIN A3)
Identification of important characteristics
Dimensions without tolerances DIN ISO 2768-mK

We reserve all rights to this document, to any patents or patent registrations related hereto, and to the duplication, retransmission by third parties and misc. use. Any use of this document is not permitted without the written consent of STABILUS.

PISTON ROD

	Date	Name
Drawn by	19.05.2008	Hein
Checked	13.07.2015	Klinkner

Document No.: 10151065
Material No.: 0431WX

Ident. Doc.: L54