ⓐ piston rod processing per STAB-Spec. 10028959, table 1

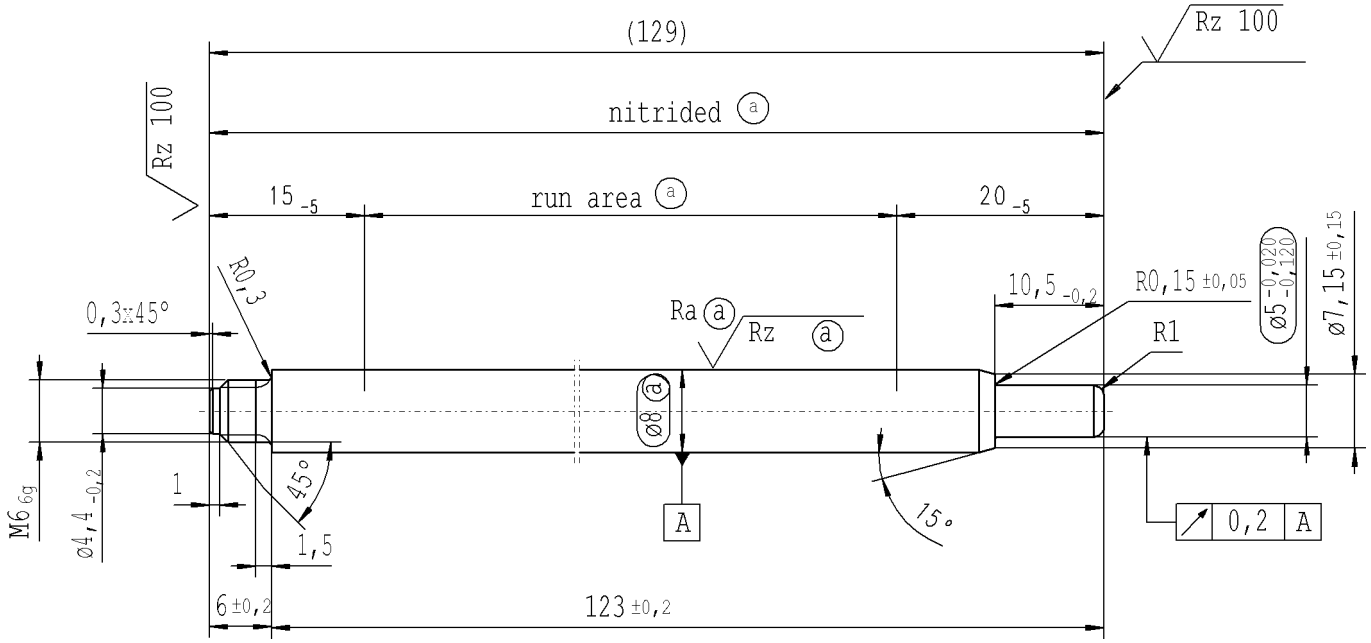

Rz 25 (Rz 100 Ra ⓐ Rz ⓐ) +0,2 -0,2

thread tolerances acc. to DIN ISO 965-3

AIAG CQI-standards acc. to STAB-Spec. 10027692

Environmental protection acc. to STAB-Spec. 10005649

DE: X	EN: X	ES:	IT:	PR:	FR:	RO:	CAD created document; handwritten changes not permitted

new	INITIAL RELEASE
old	-
Field	-
Date/Name	03.01.2019 Höfer
Chg. No.	674536
Rev.	0

RELEASE for supplier
company Zhang Shi
Dat. 03.01.2019 Schilz A.
(date / signature)

Material: 1.1193
S45C JISG 4051

Edge tolerances acc. to DIN ISO 13715
Surface finish DIN EN ISO 1302
Replaces:

STABILUS

All dimensions are in mm

Identification of important characteristics

Scale: (Original DIN A3) 2:1

Dimensions without tolerances DIN ISO 2768-mK

We reserve all rights to this document, to any patents or patent registrations related hereto, and to the duplication, retransmission by third parties and misc. use. Any use of this document is not permitted without the written consent of STABILUS.

PISTON ROD

	Date	Name
Drawn by	03.01.2019	Höfer
Checked	03.01.2019	Mauer

Document No.: 10258913

Material No.: 777266

Ident. Doc.: L02

The print-out is not subject to the modification service.

Intended for internal and supplier use

EN

***** Druckdatum: 1/7/2019 / 9:29:20 AM ***** Ausdruck nicht massgetreu *****