The print-out is not subject to the modification service.
Intended for internal and supplier use
EN

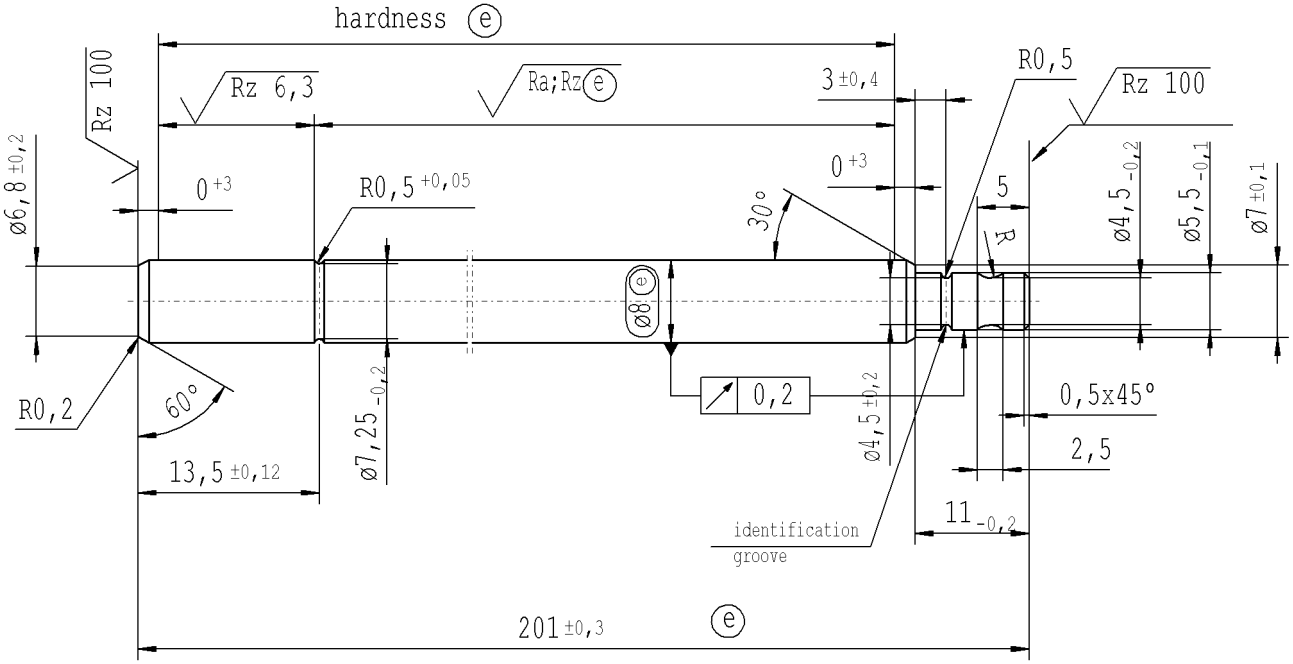

(e) piston rod processing acc.to STAB-Spec.10028959 Table II

+0,2 +0,1 | -0,2 | Rz 25 (Rz 6,3 Rz 100 Ra;Rz (e))

AIAG CQI-standards acc. to STAB-Spec. 10027692

Environmental protection acc. to STAB-Spec. 10005649

DE: X	EN: X	ES:	IT:	PR:	FR:	RO:	CAD created document; handwritten changes not permitted

new	INITIAL RELEASE
old	-
Field	-
Date/Name	14.03.2019 Höfer
Chg. No.	676871
Rev.	0

Ident. Doc.: L22

RELEASE for supplier
company ZhangShi
Dat. 14.03.2019 Schilz A.
(date / signature)

Material: 1.1193
Edge tolerances acc. to DIN ISO 13715
Surface finish DIN EN ISO 1302
Replaces:

STABILUS

All dimensions are in mm
Scale: (Original DIN A3) 2:1
Identification of important characteristics
Dimensions without tolerances DIN ISO 2768 mK

We reserve all rights to this document, to any patents or patent registrations related hereto, and to the duplication, retransmission by third parties and misc. use. Any use of this document is not permitted without the written consent of STABILUS.

PISTON ROD

	Date	Name
Drawn by	14.03.2019	Höfer
Checked	14.03.2019	Milles

Document No.: 10208225
Material No.: 448164

***** Druckdatum: 3/15/2019 / 10:33:26 AM ***** Ausdruck nicht massgetreu *****