ⓐ piston rod processing per STAB-Spec. 10028959, table 1

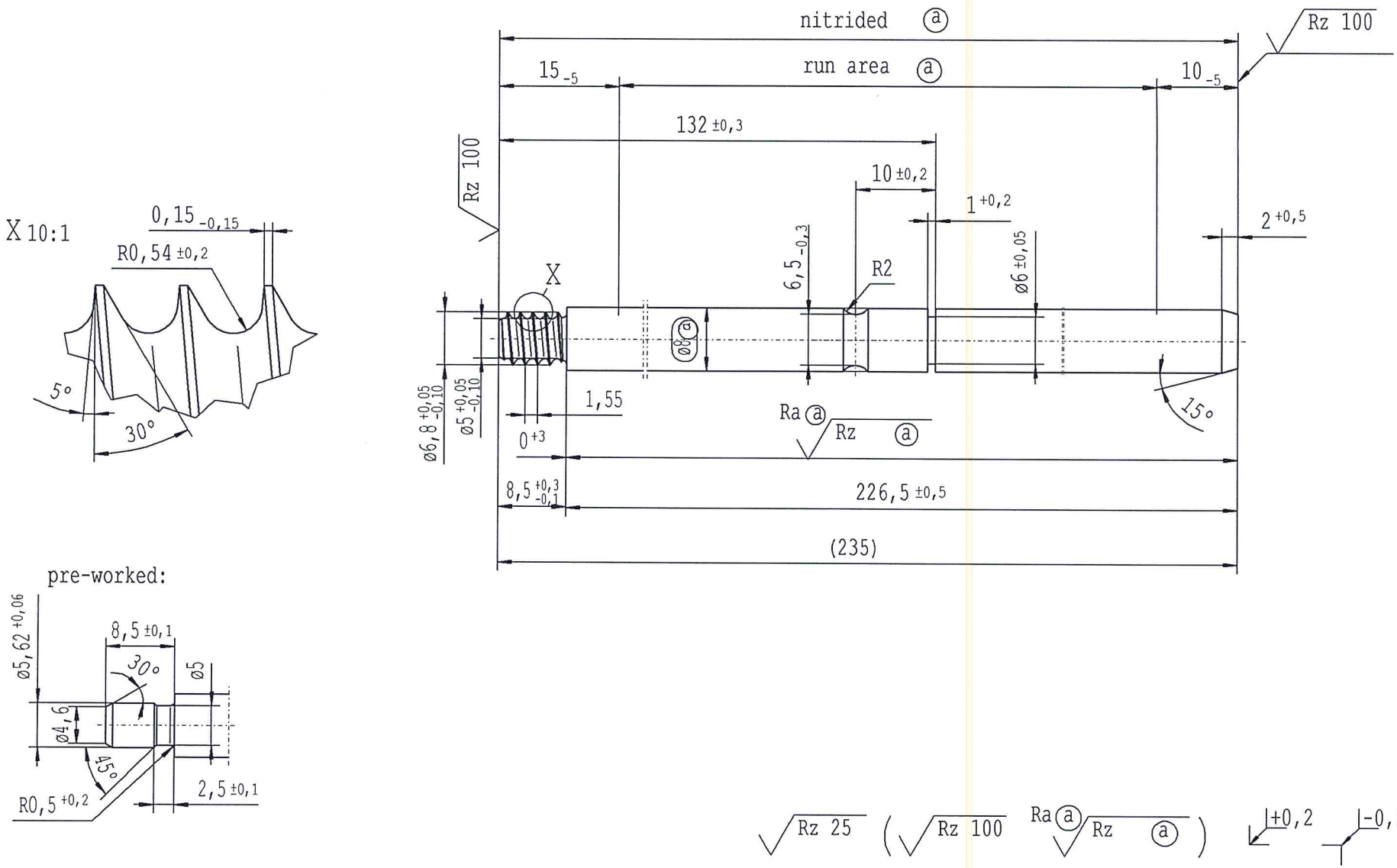

AIAG CQI-standards acc. to STAB-Spec. 10027692

Environmental protection acc. to STAB-Spec. 10005649

DE: X	EN: X	ES:	IT:	PR:	FR:	RO:	CAD created document; handwritten changes not permitted
new	INITIAL RELEASE		237	228,5	133	10	132 ±0,3 ; 226,5 ±0,5 ; (235); 8,5 ±0,1 ; 8,5 +0,3 -0,1
old	-		235	226,5	-	-	133 ±0,3 ; 228,5; (237); (8,5); (8,5)
Field	-		C4	D4	E5	E4	E-F/4-5; D/3-4; C/5-8
Date/Name	23.08.2018 Höfer		05.12.2018 Höfer				15.03.2019 Hein
Chg. No.	-		-				676120
Rev.	0		1				2

RELEASE
for supplier
company Zhang Shi
Dat. 15.03.2019 Schilz A.
(date / signature)

Material: 1.1193
S45C JISG 4051

Edge tolerances acc. to DIN ISO 13715
Surface finish DIN EN ISO 1302
Replaces:

STABILUS

All dimensions are in mm

Identification of important characteristics

Scale: (Original DIN A3) 2:1

Dimensions without tolerances DIN ISO 2768-mK

We reserve all rights to this document, to any patents or patent registrations related hereto, and to the duplication, retransmission by third parties and misc. use. Any use of this document is not permitted without the written consent of STABILUS.

	Date	Name
Drawn by	23.08.2018	Höfer
Checked	15.03.2019	Lischetzki

Document No.: 10249121

Material No.: 606615

PISTON ROD

The print-out is not subject to the modification service.
Intended for internal and supplier use
EN

Ident. Doc.: L001