The print-out is not subject to the modification service.

Intended for internal and supplier use

EN

ⓐ piston rod processing per STAB-Spec. 10028959, table 1

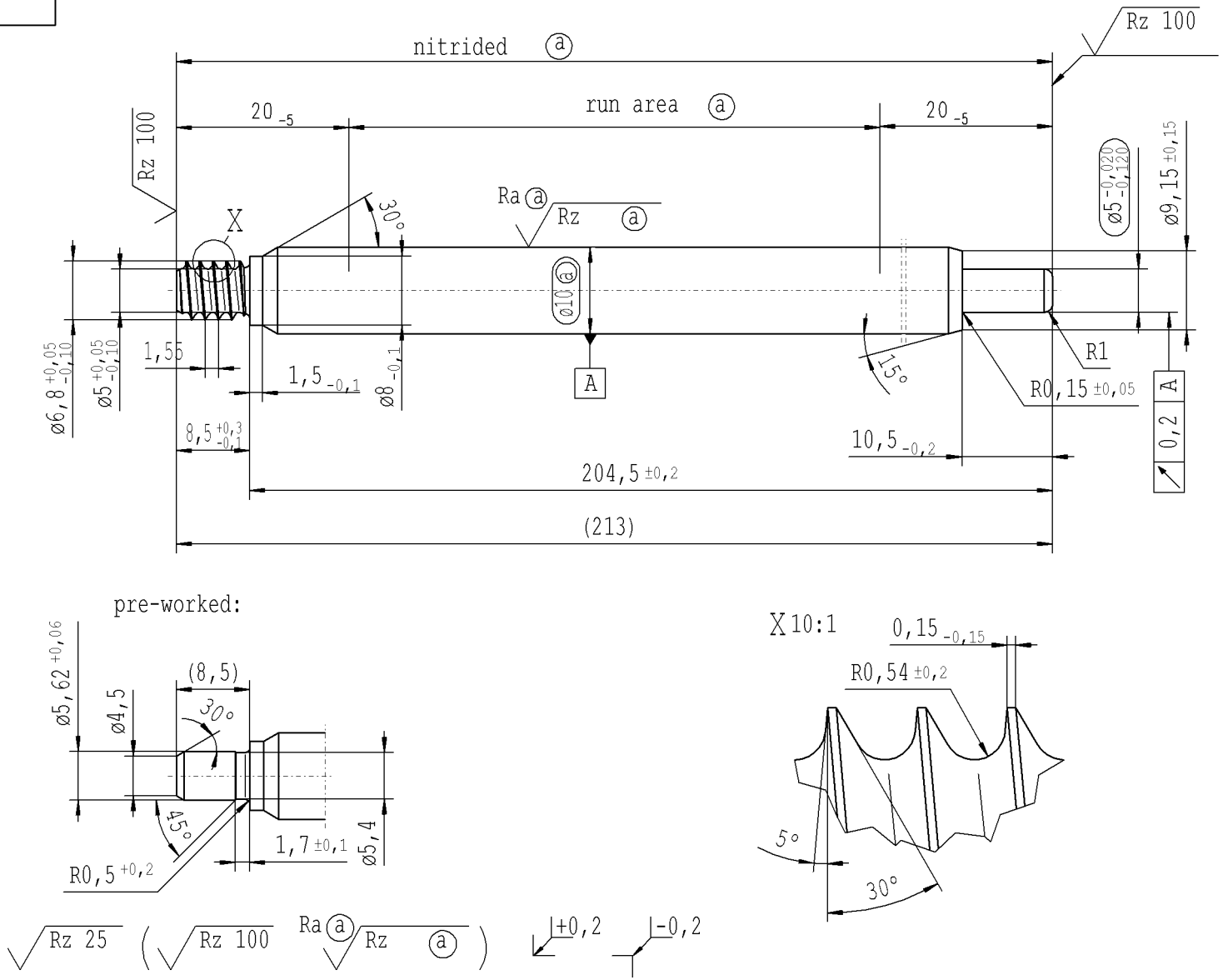

AIAG CQI-standards acc. to STAB-Spec. 10027692

Environmental protection acc. to STAB-Spec. 10005649

DE: X	EN: X	ES:	IT:	PR:	FR:	RO:	CAD created document; handwritten changes not permitted

new	INITIAL RELEASE
old	-
Field	-
Date/Name	26.04.2019 Höfer
Chg. No.	678147
Rev.	0

Ident. Doc.: 188

RELEASE for supplier

company ZhangShi

Dat. 29.04.2019 Schilz A.

(date / signature)

Material: 1.1193 S45C JISG 4051

Edge tolerances acc. to DIN ISO 13715

Surface finish DIN EN ISO 1302

Replaces:

STABILUS

All dimensions are in mm

Identification of important characteristics

Scale: (Original DIN A3) 2:1

Dimensions without tolerances DIN ISO 2768 mK

We reserve all rights to this document, to any patents or patent registrations related hereto, and to the duplication, retransmission by third parties and misc. use. Any use of this document is not permitted without the written consent of STABILUS.

PISTON ROD

	Date	Name
Drawn by	26.04.2019	Höfer
Checked	29.04.2019	Milles

Document No.: 10151520

Material No.: 154434

***** Druckdatum: 5/2/2019 / 10:50:11 AM ***** Ausdruck nicht massgetreu *****