ⓐ piston rod processing per STAB-Spec. 10028959, table 1

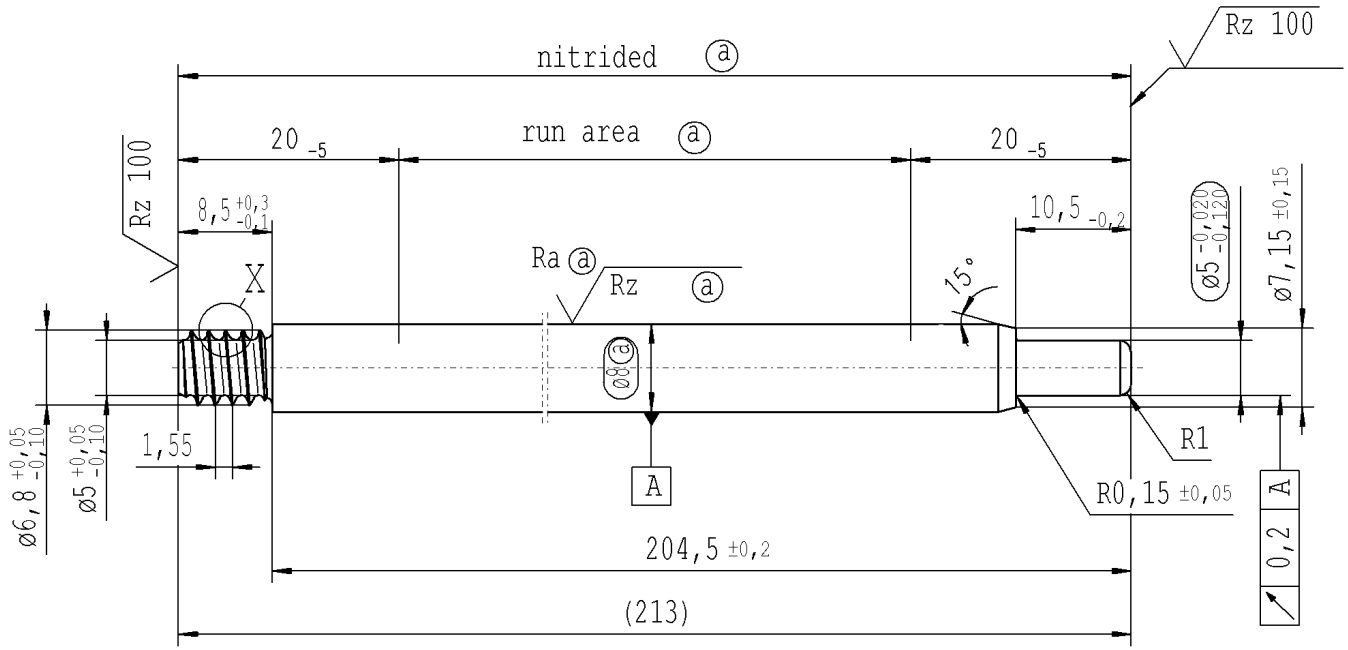

pre-worked:

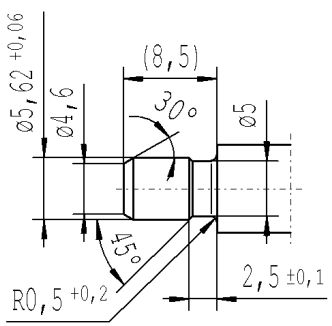

X 5:1

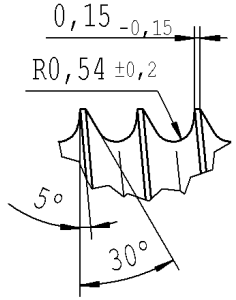

RELEASE
for supplier
company Zhang Shi
14.07.2015 Schilz A.
(date / signature)

Rz 25 (Rz 100 Ra ⓐ Rz ⓐ) +0,2 -0,2

AIAG CQI-standards acc. to STAB-Spec. 10027692

Environmental protection acc. to STAB-Spec. 10005649

DE: X	EN: X	ES:	IT:	PR:	FR:	RO:	CAD created document; handwritten changes not permitted
new	INITIAL RELEASE		run area		R1		
old	-		hardness		0,5x45°		
Field	-		F/4,5		E/2		
Date/Name	03.03.2008 K.Marx		28.07.2010 Geisbüsch		13.07.2015 Hein		
Chg. No.	-		581802		624057		
Rev.	0		1		2		

Material: 1.1193 S45C JISG 4051

Edge tolerances acc. to DIN ISO 13715

Surface finish DIN ISO 1302

Replaces:

STABILUS

All dimensions are in mm

Scale: (Original DIN A3) 2:1

Identification of important characteristics

Dimensions without tolerances DIN ISO 2768 mK

We reserve all rights to this document, to any patents or patent registrations related hereto, and to the duplication, retransmission by third parties and misc. use. Any use of this document is not permitted without the written consent of STABILUS.

PISTON ROD

	Date	Name
Drawn by	03.03.2008	K.Marx
Checked	13.07.2015	Klinkner

Document No.: 10151065

Material No.: 005686

Ident. Doc.: L18

EN

The print-out is not subject to the modification service.
Intended for internal and supplier use