The print-out is not subject to the modification service.
Intended for internal and supplier use
EN

ⓐ piston rod processing per STAB-Spec. 10028959, table 1

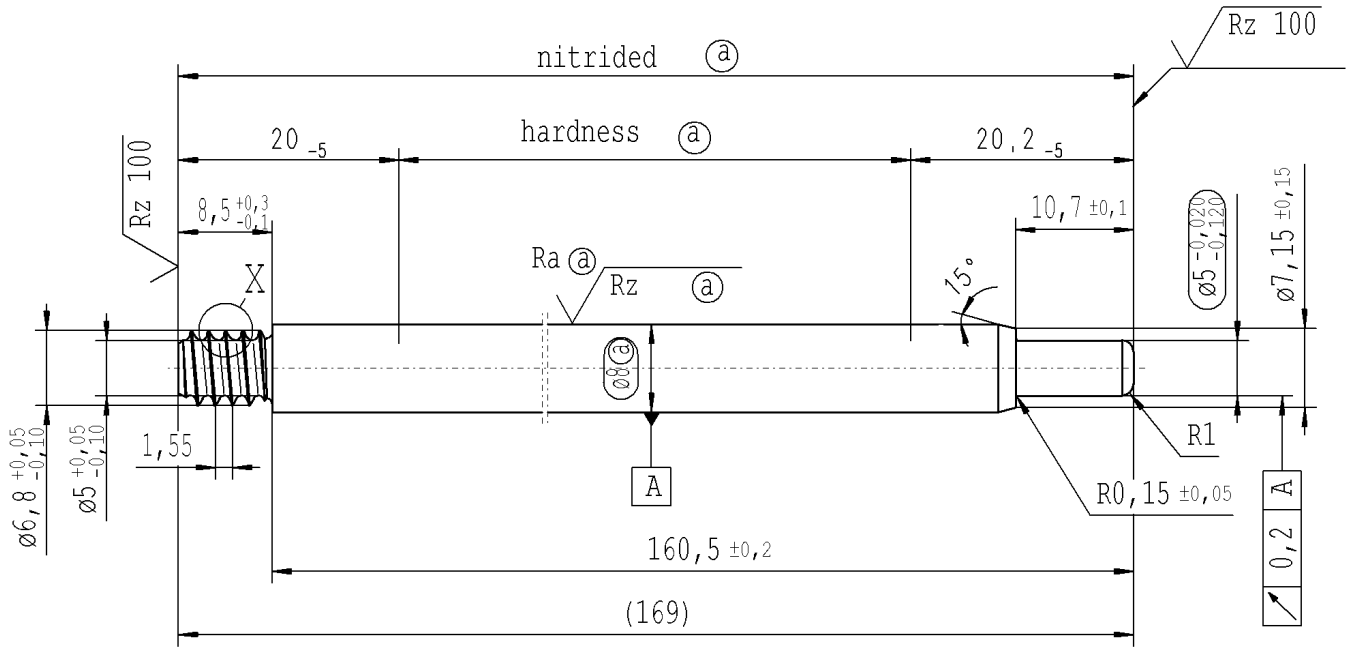

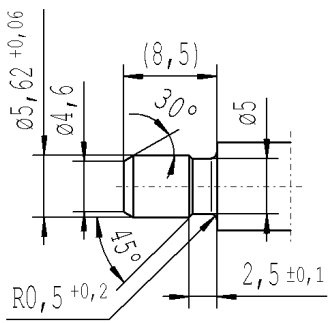

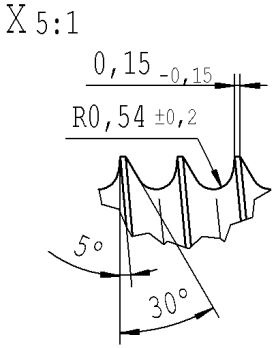

RELEASE
for supplier
company Zhang Shi
21.05.2015 Schilz A.
(date / signature)

Rz 25 (Rz 100 Ra ⓐ Rz ⓐ) +0,2 -0,2

AIAG CQI-standards acc. to STAB-Spec. 10027692

Environmental protection acc. to STAB-Spec. 10005649

DE: X	EN: X	ES:	IT:	PR:	FR:	RO:	CAD created document; handwritten changes not permitted
new	INITIAL RELEASE		R1				
old	-		0,5x45°				
Field	-		E/2				
Date/Name	14.01.2010 Höfer		20.05.2015 Hein				
Chg. No.	-		624056				
Rev.	0		1				

Ident. Doc.: L01

Material: 1.1193
S45C JISG 4051

Edge tolerances acc. to DIN ISO 13715
Surface finish DIN ISO 1302
Replaces:

STABILUS

All dimensions are in mm

Identification of important characteristics

Scale: (Original DIN A3) 2:1

Dimensions without tolerances DIN ISO 2768 mK

We reserve all rights to this document, to any patents or patent registrations related hereto, and to the duplication, retransmission by third parties and misc. use. Any use of this document is not permitted without the written consent of STABILUS.

PISTON ROD

	Date	Name
Drawn by	14.01.2010	Höfer
Checked	20.05.2015	Klinkner

Document No.: 10170209

Material No.: 834622

***** Druckdatum: 02.06.2015 / 15:36:23 ***** Ausdruck nicht massstabtreu *****