The print-out is not subject to the modification service.
Intended for internal and supplier use
EN

ⓐ piston rod processing per STAB-Spec. 10028959, table 1

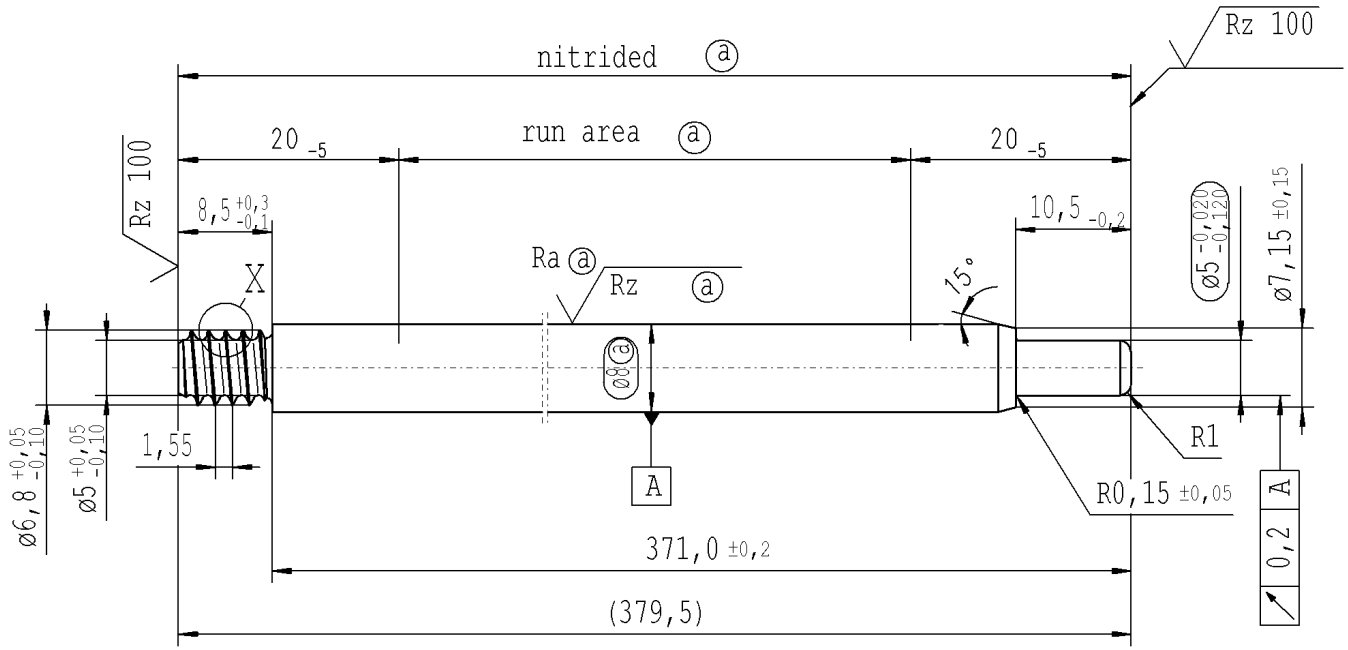


X 5:1

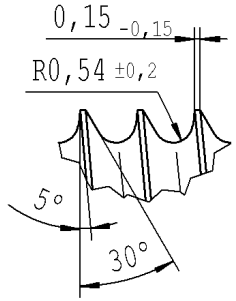


pre-worked:

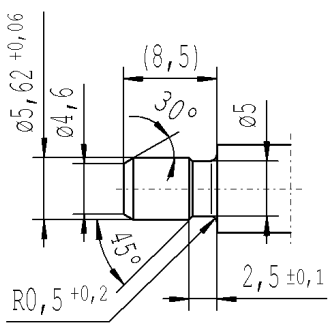


RELEASE
for supplier
company Zhang Shi
14.07.2015 Schilz A.
(date / signature)

Rz 25 ( Rz 100 Ra ⓐ Rz ⓐ ) +0,2 -0,2

AIAG CQI-standards acc. to STAB-Spec. 10027692

Environmental protection acc. to STAB-Spec. 10005649

| DE: X | EN: X | ES: | IT: | PR: | FR: | RO: | CAD created document; handwritten changes not permitted |
|---|---|---|---|---|---|---|---|
| new | INITIAL RELEASE | | run area | | R1 | | |
| old | - | | hardness | | 0,5x45° | | |
| Field | - | | F/4,5 | | E/2 | | |
| Date/Name | 13.12.2007 Höfer | | 28.07.2010 Geisbüsch | | 13.07.2015 Hein | | |
| Chg. No. | - | | 581802 | | 624057 | | |
| Rev. | 0 | | 1 | | 2 | | |

Material: 1.1193
S45C JISG 4051

Edge tolerances acc. to DIN ISO 13715
Surface finish DIN ISO 1302
Replaces:

STABILUS

All dimensions are in mm
Scale: (Original DIN A3) 2:1
Identification of important characteristics
Dimensions without tolerances DIN ISO 2768 mK

We reserve all rights to this document, to any patents or patent registrations related hereto, and to the duplication, retransmission by third parties and misc. use. Any use of this document is not permitted without the written consent of STABILUS.

PISTON ROD

| | Date | Name |
|---|---|---|
| Drawn by | 10.01.2008 | Höfer |
| Checked | 13.07.2015 | Klinkner |

Document No.: 10151065
Material No.: 005693

Ident. Doc.: L19

***** Druckdatum: 17.07.2015 / 08:58:13 ***** Ausdruck nicht massgetreu *****