The print-out is not subject to the modification service.
Intended for internal and supplier use
EN

ⓐ piston rod processing per STAB-Spec. 10028959, table 1

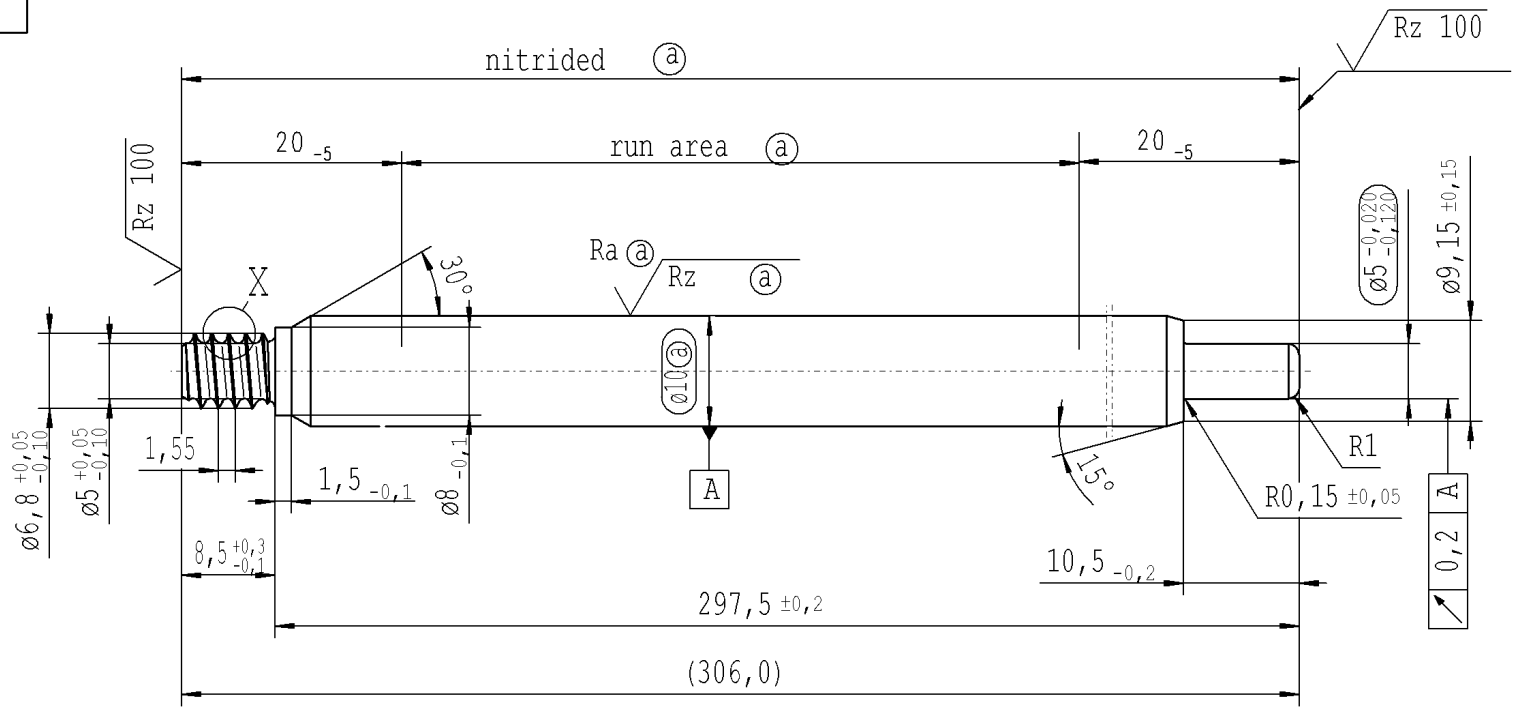

pre-worked:

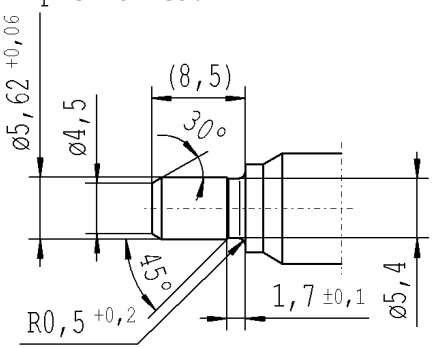

X 5:1

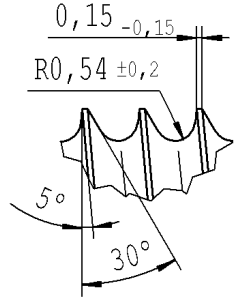

RELEASE
for supplier
company Zhang Shi
09.06.2015 Schilz A.
(date / signature)

Rz 25 (Rz 100 Ra ⓐ Rz ⓐ) +0,2 -0,2

AIAG CQI-standards acc. to STAB-Spec. 10027692

Environmental protection acc. to STAB-Spec. 10005649

DE: X	EN: X	ES:	IT:	PR:	FR:	RO:	CAD created document; handwritten changes not permitted
new	INITIAL RELEASE	englich text: nitrided	run area	R1			
old	-	englich text: nitrited	hardness	0,5x45°			
Field	-	F/4-5	F 4	E/2			
Date/Name	16.01.2008 Höfer	29.05.2008 Hein	26.7.10 Keßelh.	08.06.2015 Hein			
Chg. No.	-	565635	581811	624059			
Rev.	0	1	2	3			

Ident. Doc.: L02

Material: 1.1193
S45C JISG 4051

Edge tolerances acc. to DIN ISO 13715
Surface finish DIN ISO 1302
Replaces:

STABILUS

All dimensions are in mm

Identification of important characteristics

Scale: (Original DIN A3) 2:1

Dimensions without tolerances DIN ISO 2768 mK

We reserve all rights to this document, to any patents or patent registrations related hereto, and to the duplication, retransmission by third parties and misc. use. Any use of this document is not permitted without the written consent of STABILUS.

PISTON ROD

	Date	Name
Drawn by	16.01.2008	Höfer
Checked	08.06.2015	Klinkner

Document No.: 10151520

Material No.: 005958

***** Druckdatum: 08.06.2015 / 09:12:33 ***** Ausdruck nicht massstabtreu *****