The print-out is not subject to the modification service.
Intended for internal and supplier use
EN

ⓐ piston rod processing per STAB-Spec. 10028959, table 1

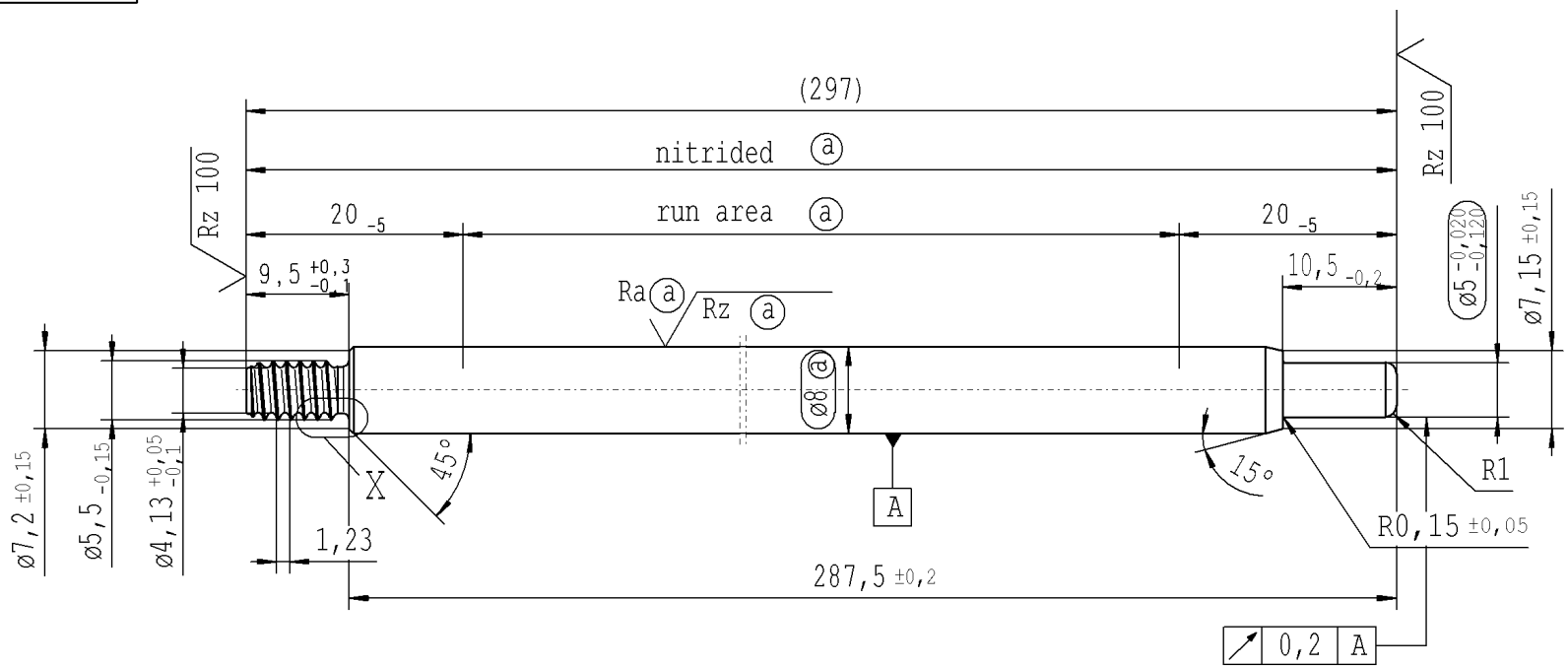

pre-worked:

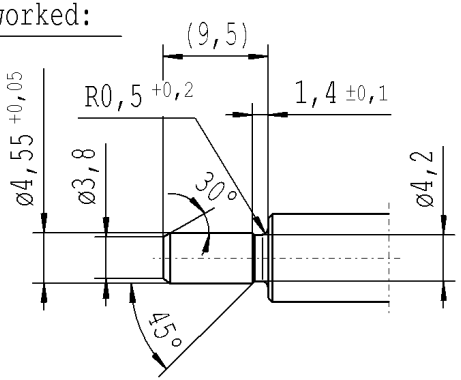

X 5:1

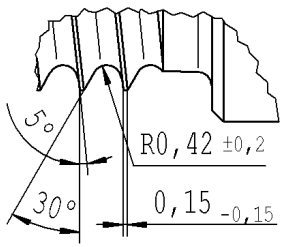

RELEASE
for supplier
company Zhang Shi
12.06.2015 Schilz A.
(date / signature)

Rz 25 (Rz 100 Ra ⓐ Rz ⓐ) +0,2 -0,2

AIAG CQI-standards acc. to STAB-Spec. 10027692

Environmental protection acc. to STAB-Spec. 10005649

DE: X	EN: X	ES:	IT:	PR:	FR:	RO:	CAD created document; handwritten changes not permitted
new	INITIAL RELEASE	run area	R1				
old	-	hardness	0,5x45°				
Field	-	E 4/5	D-E/1-2				
Date/Name	24.02.2009 Hein	23.7.10 Keßelh.	11.06.2015 Hein				
Chg. No.	-	581803	624058				
Rev.	0	1	2				

Material: 1.1193 S45C JISG 4051

Edge tolerances acc. to DIN ISO 13715

Surface finish DIN EN ISO 1302

Replaces:

STABILUS

All dimensions are in mm

Identification of important characteristics

Scale: (Original DIN A3) 2:1

Dimensions without tolerances DIN ISO 2768-mK

We reserve all rights to this document, to any patents or patent registrations related hereto, and to the duplication, retransmission by third parties and misc. use. Any use of this document is not permitted without the written consent of STABILUS.

PISTON ROD

	Date	Name
Drawn by	24.02.2009	Hein
Checked	11.06.2015	Klinkner

Document No.: 10151066

Material No.: 026394

Ident. Doc.: L36

***** Druckdatum: 26.06.2015 / 07:53:43 ***** Ausdruck nicht massstabtreu *****