The print-out is not subject to the modification service.

Intended for internal and supplier use

EN

ⓐ piston rod processing per STAB-Spec. 10028959, table 1

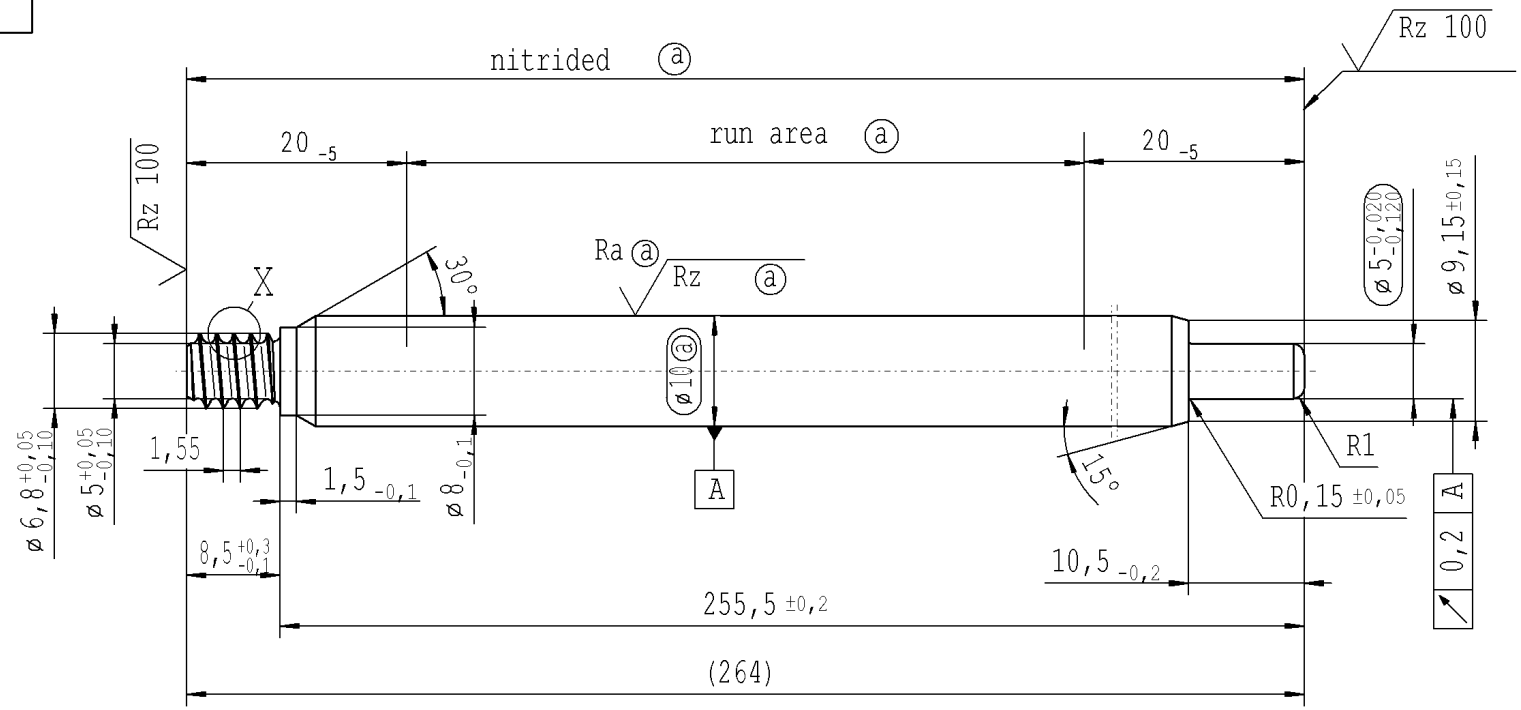

pre-worked:

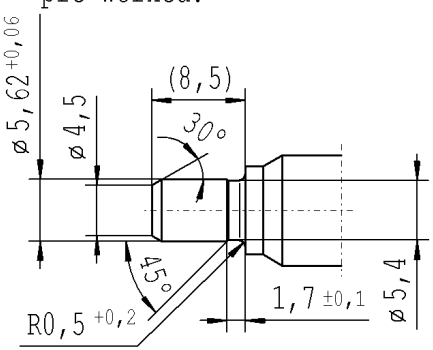

X 5:1

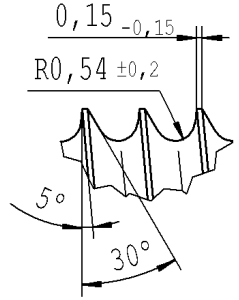

RELEASE
for supplier
company Zhang Shi
09.06.2015 Schilz A.
(date / signature)

Rz 25 (Rz 100 Ra ⓐ Rz ⓐ) +0,2 -0,2

AIAG CQI-standards acc. to STAB-Spec. 10027692

Environmental protection acc. to STAB-Spec. 10005649

DE: X	EN: X	ES:	IT:	PR:	FR:	RO:	CAD created document; handwritten changes not permitted

new	INITIAL RELEASE	R1
old	-	0,5x45°
Field	-	E/2
Date/Name	14.01.2014 Kron	08.06.2015 Hein
Chg. No.	610024	624059
Rev.	0	1

Material: 1.1193 S45C JISG 4051

Edge tolerances acc. to DIN ISO 13715

Surface finish DIN EN ISO 1302

Replaces:

STABILUS

All dimensions are in mm

Identification of important characteristics

Scale: (Original DIN A3) 2:1

Dimensions without tolerances DIN ISO 2768 mK

We reserve all rights to this document, to any patents or patent registrations related hereto, and to the duplication, retransmission by third parties and misc. use. Any use of this document is not permitted without the written consent of STABILUS.

	Date	Name
Drawn by	14.01.2014	Kron
Checked	08.06.2015	Klinkner

Document No.: 10151520

Material No.: 549955

PISTON ROD

Ident. Doc.: L33

***** Druckdatum: 08.06.2015 / 09:13:37 ***** Ausdruck nicht massstabtreu *****