The print-out is not subject to the modification service.

Intended for internal and supplier use

EN

nitrided, light

surface imperfections
acc.to STAB-Spec.10198879

carrying surface taper area
after touch up with ink
min 80% of taper gauge

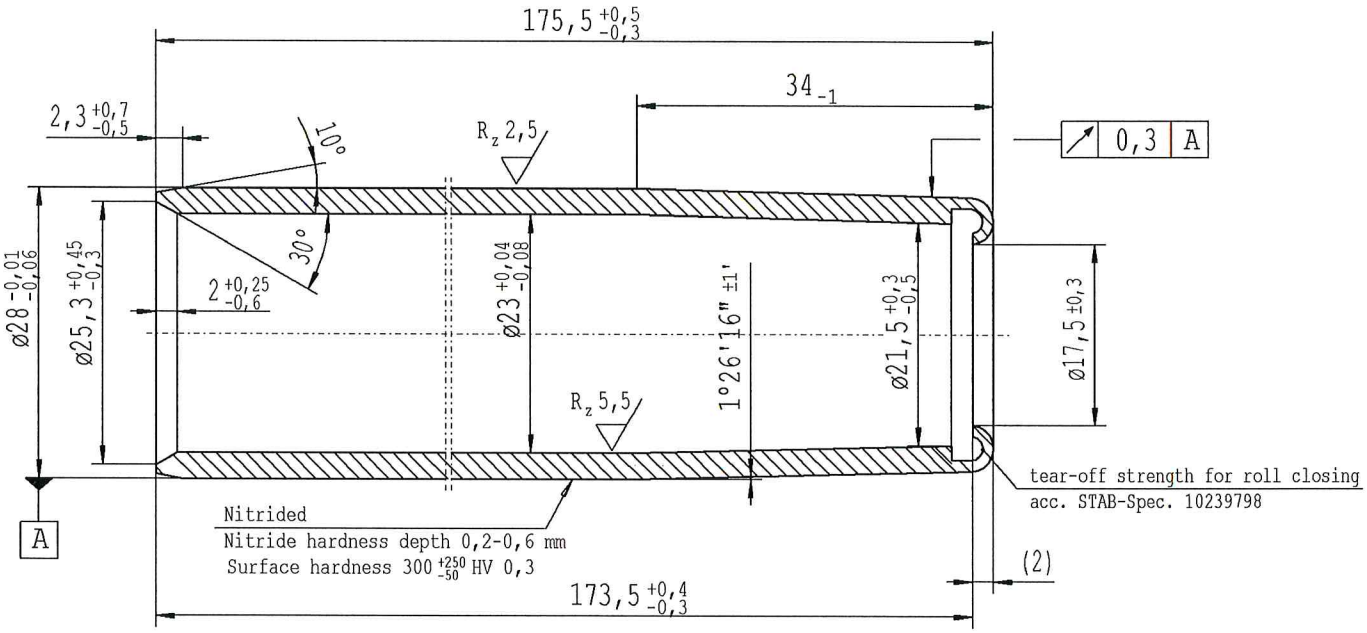

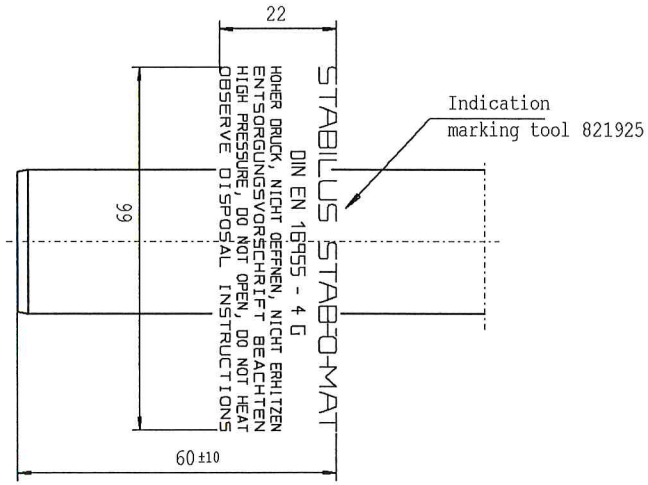

Machining dimensions

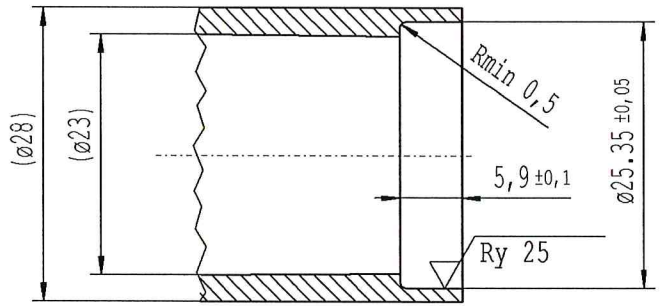

+0,2 -0,2 Rz 25 (Rz 5,5 , Rz 2,5 , Ry 25)

AIAG CQI-standards acc. to STAB-Spec. 10027692

Environmental protection acc. to STAB-Spec. 10005649

DE: X	EN: X	ES:	IT:	PR:	FR:	RO:	CAD created document; handwritten changes not permitted
new	INITIAL RELEASE						
old	-						
Field	-						
Date/Name	08.11.2019 Höfer						
Chg. No.	683271						
Rev.	0						

Ident. Doc.: L21

RELEASE
for supplier
company Zhang Shi
Date 08.11.2019 Schulz A.
(date / signature)

Material: SPHT3 +C GB/T 31315

Edge tolerances acc. to DIN ISO 13715

Surface finish DIN EN ISO 1302

Replaces:

STABILUS

All dimensions are in mm

Scale: (Original DIN A3) 2:1

Identification of important characteristics

Dimensions without tolerances DIN ISO 2768 mK

We reserve all rights to this document, to any patents or patent registrations related hereto, and to the duplication, retransmission by third parties and misc. use. Any use of this document is not permitted without the written consent of STABILUS.

	Date	Name
Drawn by	08.11.2019	Höfer
Checked	08.11.2019	Müller

Document No.: 10207502

Material No.: 572208

PRESSURE TUBE