The print-out is not subject to the modification service.

Intended for internal and supplier use

EN

supp. No.	material no. processing and surface treatment acc. to STAB-Spec. 10006248 Tab. IV (a) version 1	10006248 Tab. X (a) version 1	10028959 Tab. I (b) version 2	A overall length	E length without endfitting stud
267	808095	808095	808095	265.5	257.0
268	808573	808573	808573	453.0	444.5
269	808812	808812	808812	163.0	154.5
270	809051	809051	809051	304.0	295.5
271	432150	432150	432150	380.0	371.5
272	508630	508630	508630	251.5	243.0
273	658244	658244	658244	298.0	289.5
274	798298	798298	798298	239.0	230.5
275	798776	798776	798776	282.5	274.0
276	212749	212749	212749	390.0	381.5
277	301896	301896	301896	235.5	227.0
278	302613	302613	302613	190.5	182.0
279	153717	153717	153717	99.0	90.5
280	603037	603037	603037	372.0	363.5
281	658725	658725	658725	342.0	333.5
282	408493	408493	408493	90.0	81.5
283	656101	656101	656101	96.0	87.5

version 1 (only self-manufacturing) * material: 010731

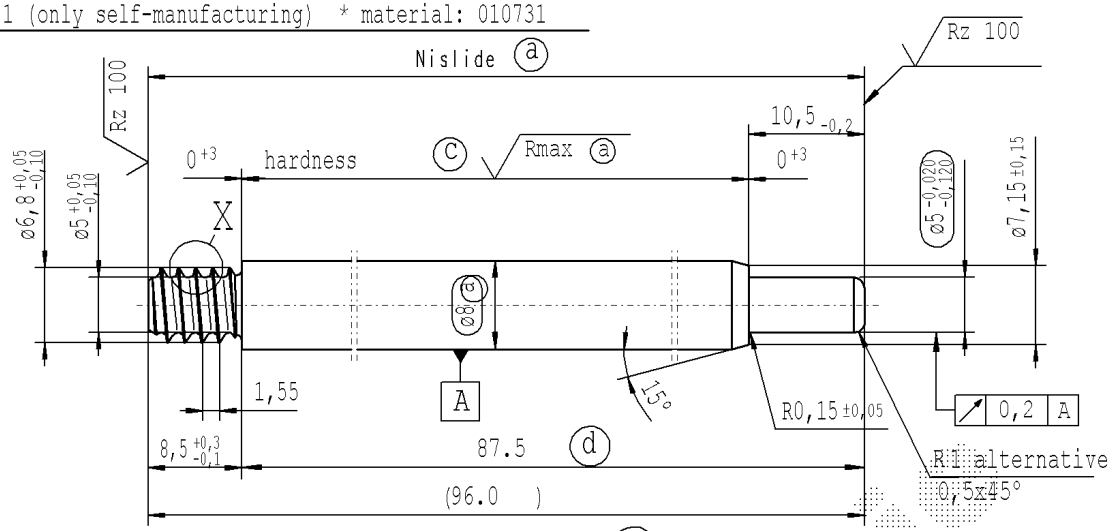

(c) before grinding: Hardness depth and hardness test acc. to STAB-Spec. 10258370

(d) tolerances: +0,2 -0,1 after turning; ±0,3 after straightening; ±0,3 after nisliding

version 2 (only external production) * material: 1.1193 S45C JISG 4051

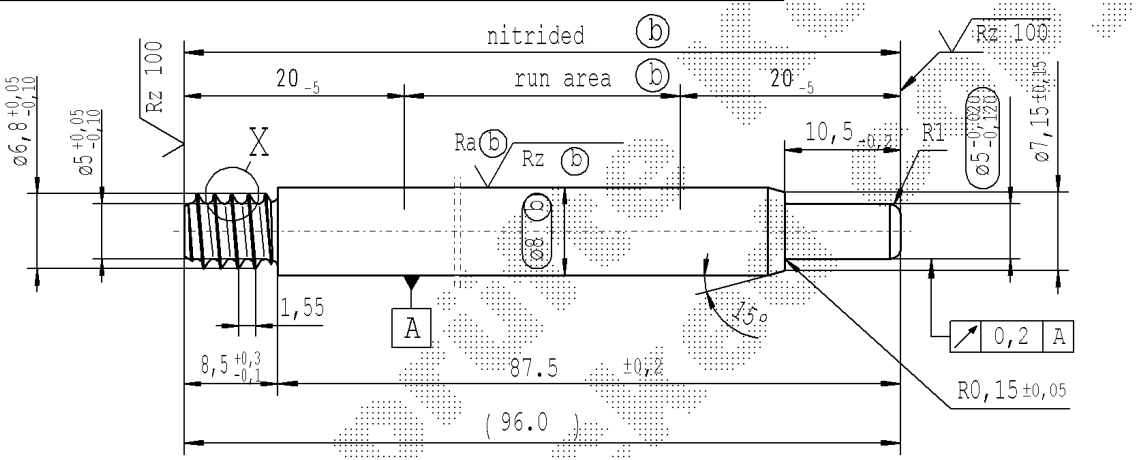

approved lengths: 50-600 mm

pre-worked: (only self-manufacturing)

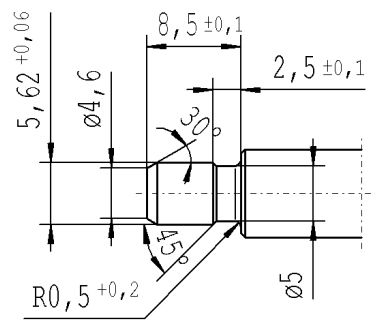

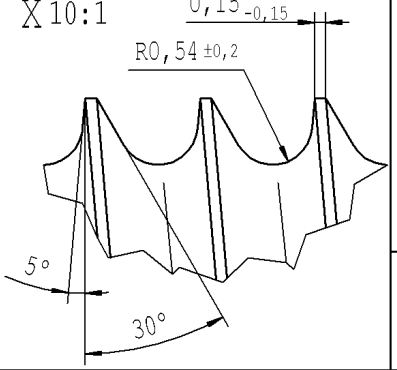

Rz 25 (Rz 100 Rmax (a) Ra (b) Rz (b)) +0,2 -0,2

sheet 14 of 14

AIAG CQI-standards acc. to STAB-Spec. 10027692

Environmental protection acc. to STAB-Spec. 10005649

DE: X	EN: X	ES:	IT:	PR: X	FR:	RO: X	CAD created document handwritten changes not permitted

new	position of angle 5° corrected	60-600	(c) = acc. STAB-Spec. 10258370	new format Internal/Supplier	Tab. X
old	wrong position of angle 5°	100-600	(c) = RHT 0,4 .... 0,7 mm	Supplier drawing separately	Tab. V
Field	C-D/4-5	B3	B 4-5	-	Pos.195
Date/Name	28.03.2019 Hein	26.04.2019 Höfer	15.05.2019 Jablonski	22.04.2020 Höfer	
Chg. No.	677185	678147	678682	687145	
Rev.	18	19	20	21	

Material: *

Edge tolerances acc. to DIN ISO 13715

Surface finish: DIN EN ISO 1302

Replaces:

STABILUS

All dimensions are in mm

Scale: (Original DIN A3) 2:1

Marking of special characteristics according to STAB-Spec. 10270932

Dimensions without tolerances DIN ISO 2768-mK

We reserve all rights to this document, to any patents or patent registrations related hereto, and to the duplication, retransmission by third parties and misc. use. Any use of this document is not permitted without the written consent of STABILUS.

	Date	Name
Drawn by	05.12.2007	Höfer
Checked	22.04.2020	Klinkner

Document No.: 10151065

Material No.:

PISTON ROD

Ident. Doc.:

Erstelldatum: 18/11/2020 - 9:35