supp. No.	material no.			A	E
	processing and surface treatment acc. to STAB-Spec.			overall length	length without endfitting stud
	10006248 Tab. IV (a) version 1	10006248 Tab. X (a) version 1	10028959 Tab. I (b) version 2		
1	193878	193878	193878	171	158.5

version 1 (only self-manufacturing) * material: 010715

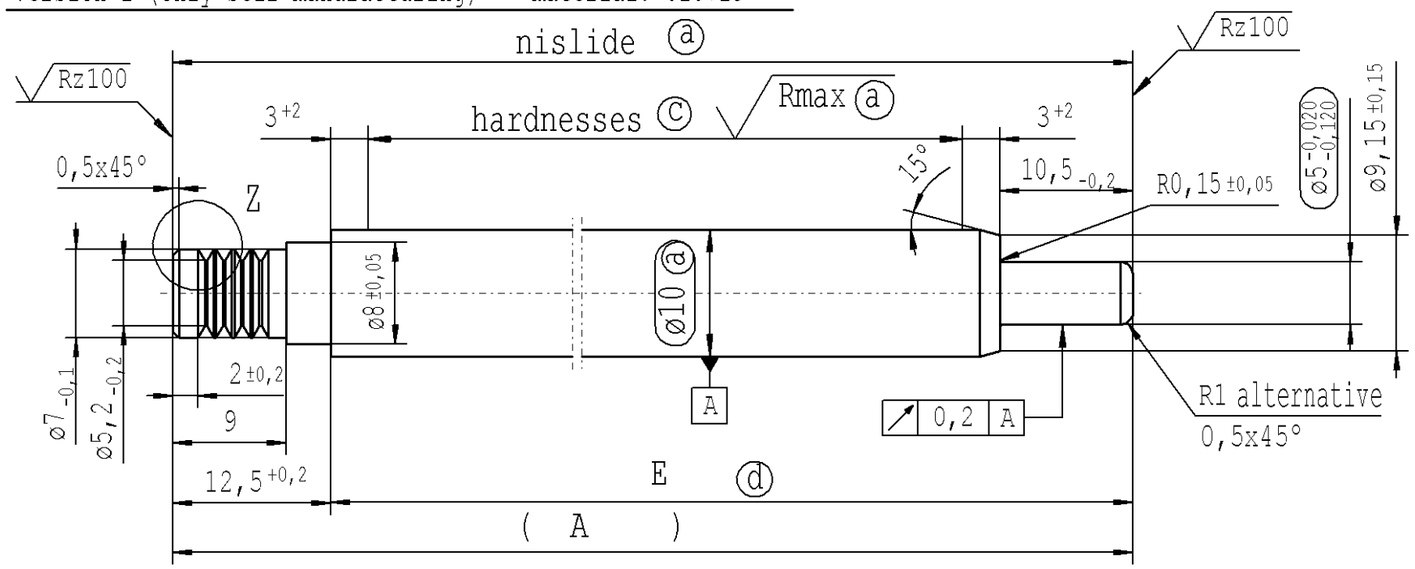

(c) before grinding:
Hardness depth and hardness test
acc. to STAB-Spec. 10258370

(d) tolerances: +0,2 -0,1 after turning;
±0,3 after straightening;
±0,3 after nisliding

version 2 (only external production) * material: 1.1193 S45C JISG 4051

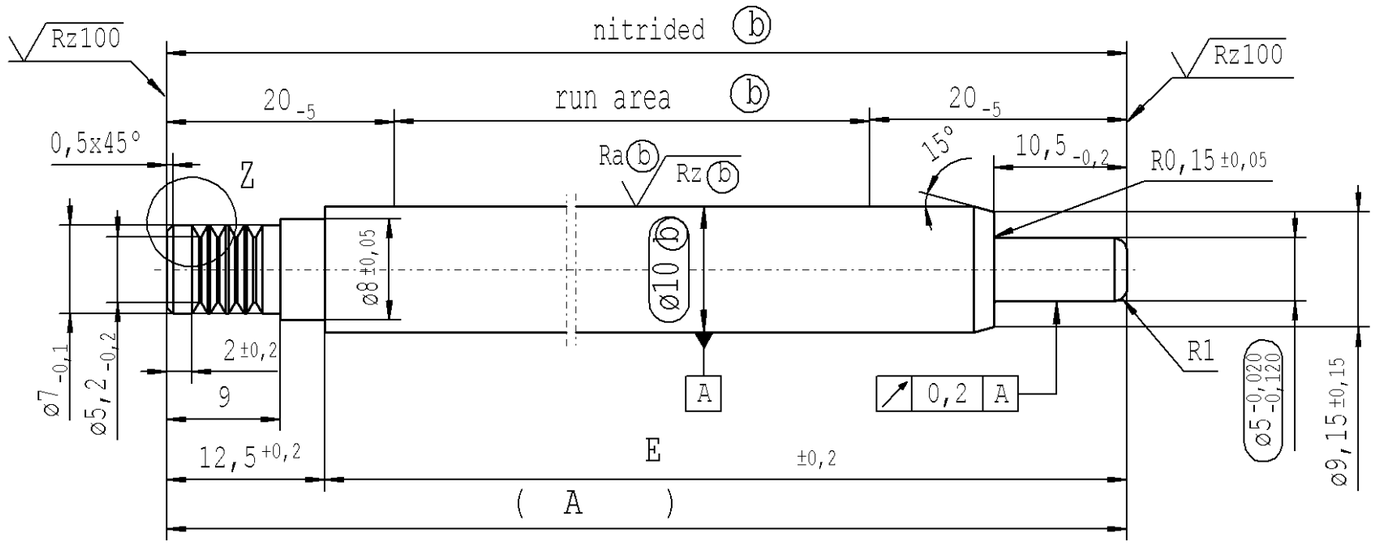

approved lengths: 50-600 mm

Z 10:1

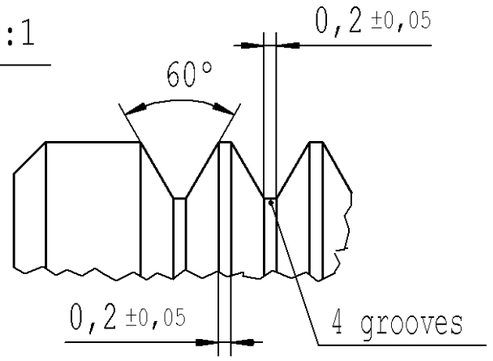

Rz 25 (Rz 100 Rmax (a) Ra (b) Rz (b)) +0,2 -0,2

sheet 1 of 1

AIAG CQI-standards acc. to STAB-Spec. 10027692

Environmental protection acc. to STAB-Spec. 10005649

DE: X | EN: X | ES: | IT: | PR: | FR: | RO: X | CAD created document; handwritten changes not permitted

Ident. Doc.:	
new	INITIAL RELEASE
old	-
Field	-
Date/Name	07.05.2021 Hein
Chg. No.	-
Rev.	0

Material: *

Edge tolerances acc. to DIN ISO 13715

Surface finish DIN EN ISO 1302

Replaces:

STABILUS

All dimensions are in mm

Marking of special characteristics according to STAB-Spec. 10270932

Scale: (Original DIN A3) 2:1

Dimensions without tolerances DIN ISO 2768-mK

We reserve all rights to this document, to any patents or patent registrations related hereto, and to the duplication, retransmission by third parties and misc. use. Any use of this document is not permitted without the written consent of STABILUS.

	Date	Name
Drawn by	07.05.2021	C.Hein
Checked	07.05.2021	Klinkner

Document No.: 10293634

Material No.:

PISTON ROD

The print-out is not subject to the modification service.
Intended for internal and supplier use
EN
Erstelldatum: 11/5/2021 - 8:29
***** Druckdatum: 11.05.2021 / 08:31:00 ***** Ausdruck nicht massoetreu *****