The print-out is not subject to the modification service.

Intended for internal and supplier use

EN

supp. No.	material no. processing and surface treatment acc. to STAB-Spec. 10006248 Tab. IV (a) version 1	10006248 Tab. X (a) version 1	10028959 Tab. I (b) version 2	A overall length	B thread length	E length without end-fitting stud
1		484223	484223	195	7	188
2	772937	772937	772937	207	7	200
3	642927	642927	642927	102	7	95
4	424728	424728	424728	300	7	293
5	424967	424967	424967	501	7	494
6	320763	320763	320763	87	7	80
7	346097	346097	346097	456	7	449
8	302605	302605	302605	198	7	191
9	436210	436210	436210	159	7	152
10	587500	587500	587500	450	7	443
11	638885	638885	638885	399	7	392
12	199366	199366	199366	213	7	206
13	579854	579854	579854	282	7	275
14	580332	580332	580332	276	7	269
15	581288	581288	581288	201	7	194
16	353761	353761	353761	234	7	227
17	881715	881715	881715	177	7	170
18	848495	848495	848495	297	7	290
19	314093	314093	314093	228	7	221
20	498123	498123	498123	447	7	440
21	829855	829855	829855	123	7	116
22	294735	294735	294735	114	7	107
xx	xxxxxx	xxxxxx		252	7	245

version 1 (only self-manufacturing) * material: 010715

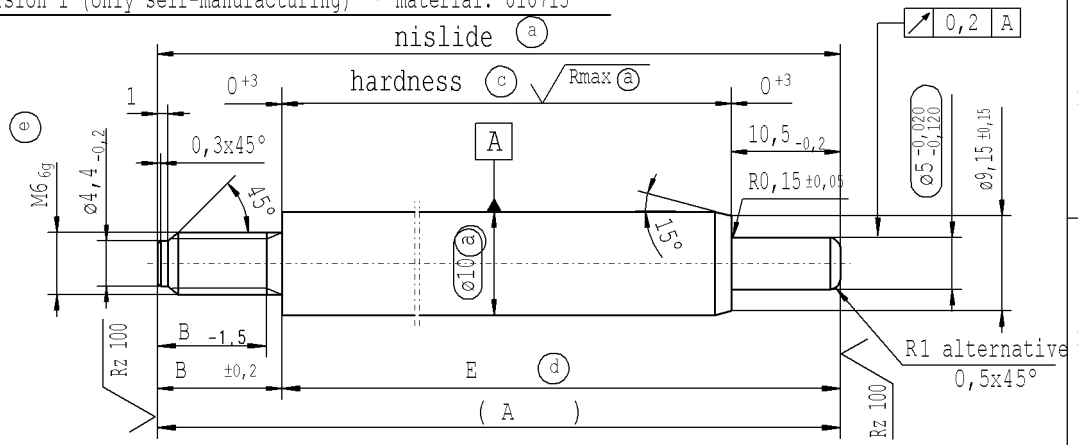

(c) before grinding: Hardness depth and hardness test acc. to STAB-Spec. 10258370

(e) threaded stud rough-turned dim. ø5,29 -0,06
thread roll tolerance 6e
thread tolerances acc. to DIN ISO 965-3

(d) tolerances: +0,2 -0,1 after turning;
±0,3 after straightening;
±0,3 after nisliding

version 2 (only external production) * material: 1.1193 S45C JISG 4051

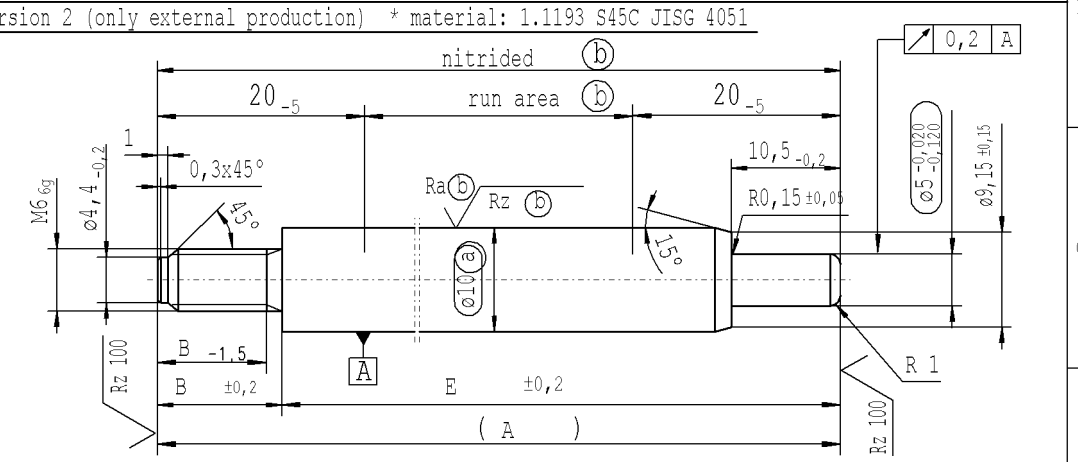

thread tolerances acc. to DIN ISO 965-3

approved lengths: 50-600 mm

Rz 25 (Rz 100 Rmax (a) Ra (b) Rz (b)) +0,2 -0,2

sheet 1 of 1

AIAG CQI-standards acc. to STAB-Spec. 10027692

Environmental protection acc. to STAB-Spec. 10005649

DE: X	EN: X	ES:	IT:	PR:	FR:	RO: X	CAD created document; handwritten changes not permitted

new	product family: 2016/0250	(c) = acc. STAB-Spec. 10258370	new format Internal/Supplier
old	product family: 2012/0213	(c) = RHT 0,4 .... 0,7 mm	Supplier drawing separately
Field	B-C/2	C 5-6	-
Date/Name	02.03.2016 Hein	15.05.2019 Donat	16.06.2020 Höfer
Chg. No.	634638	678703	688989
Rev.	5	6	7

Material: *

Edge tolerances acc. to DIN ISO 13715

Surface finish DIN EN ISO 1302

Replaces:

STABILUS

All dimensions are in mm

Scale: 2:1 (Original DIN A3)

Marking of special characteristics according to STAB-Spec. 10270932

Dimensions without tolerances DIN ISO 2768-mK

We reserve all rights to this document, to any patents or patent registrations related hereto, and to the duplication, retransmission by third parties and misc. use. Any use of this document is not permitted without the written consent of STABILUS.

PISTON ROD

	Date	Name
Drawn by	19.11.2008	Hein
Checked	16.06.2020	Klinkner

Document No.: 10160325

Material No.:

Ident. Doc.:

Erstelldatum: 26/3/2021 - 10:11

SIGNATURE ELECTRONICALLY GENERATED