The print-out is not subject to the modification service.

Intended for internal and supplier use

EN

supp. No.	material no. processing and surface treatment acc. to STAB-Spec. 10006248 Tab. XVI (a) version 1		10028959 Tab. I (b) version 2	A overall length	E length without endfitting stud
20	182166		182166	280.5	271.0
21	191487		191487	296.0	286.5
22	217538		217538	378.0	368.5
23	245262		245262	411.0	401.5
24	256734		256734	138.0	128.5
25	257212		257212	339.0	329.5
26	258646		258646	330.0	320.5
27	261514		261514	166.0	156.5
28	262948		262948	279.0	269.5
29	265338		265338	126.0	116.5
30	268923		268923	132.0	122.5
31	271552		271552	178.0	168.5
32	275854		275854	159.0	149.5
33	277049		277049	160.0	150.5
34	281112		281112	277.0	267.5
35	281590		281590	141.0	131.5
36	283502		283502	426.0	416.5
37	290433		290433	253.5	244.0
38	290911		290911	229.0	219.5

pre-worked: (only self-manufacturing)

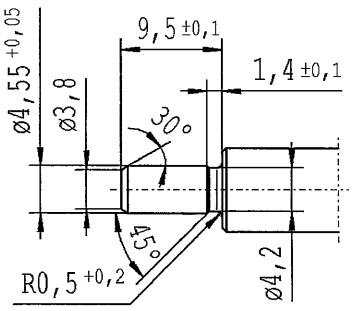

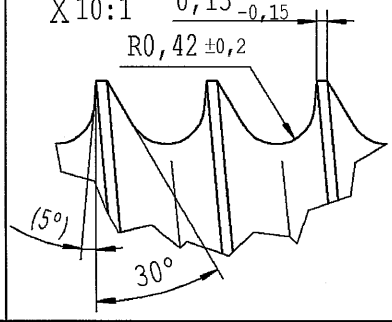

version 1 (only self-manufacturing) * material: 010731

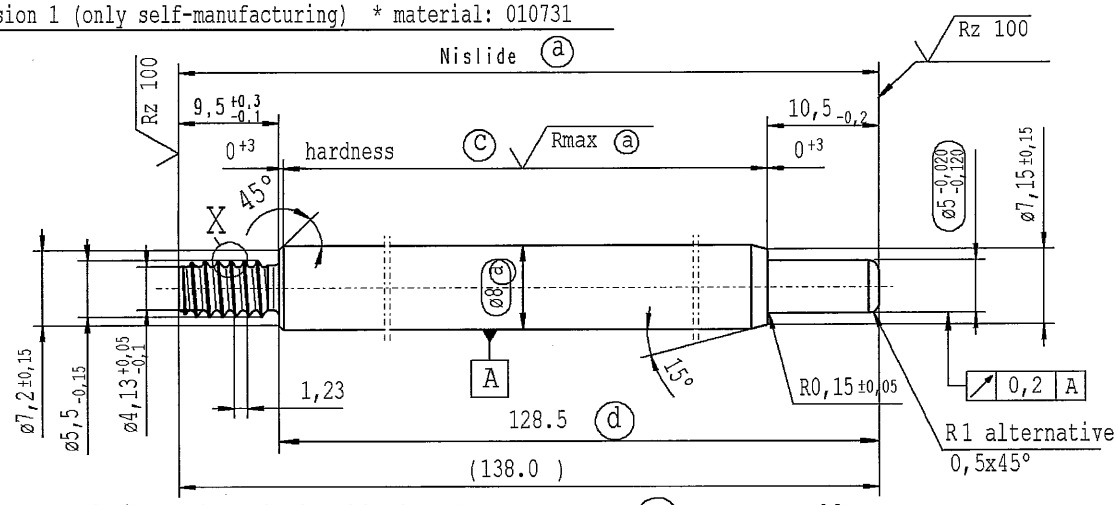

(c) before grinding: Hardness depth and hardness test acc. to STAB-Spec. 10258370

(d) tolerances: +0,2 -0,1 after turning
±0,3 after straightening
±0,3 after nisliding

version 2 (only external production) * material: 1.1193 S45C JISG 4051

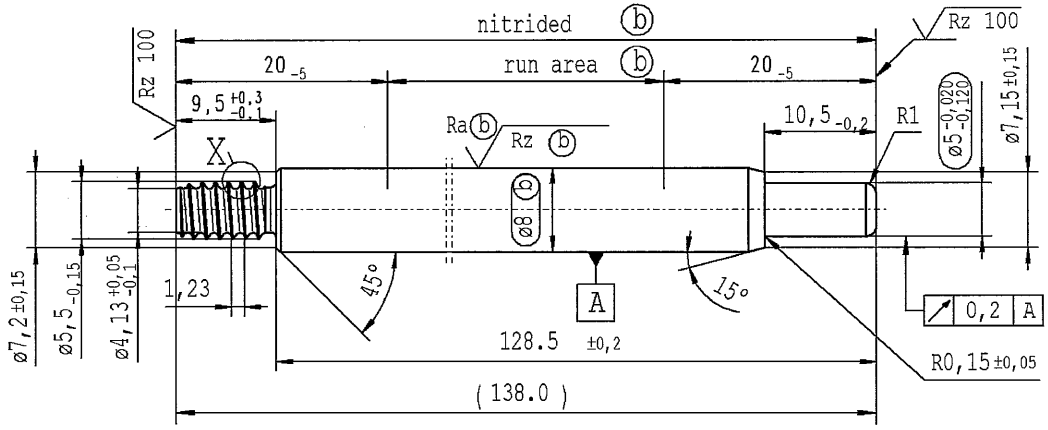

approved lengths: 50-600 mm

Rz 25 (Rz 100 Rmax (a) Ra (b) Rz (b)) +0,2 -0,2

sheet 2 of 5

AIAG CQI-standards acc. to STAB-Spec. 10027692

Environmental protection acc. to STAB-Spec. 10005649

DE: X	EN: X	ES:	IT:	PR: X	FR:	RO: X	CAD created document handwritten changes not permitted

new	no technical change, no new first sample required	(5°) no technical change, no new first sample required
old	Tab IV	5°
Field	C-F 8	B/6-7
Date/Name	16.12.2020 Hein	08.04.2021 Hein
Chg. No.	693200	696948
Rev.	3	3

Material: *

Edge tolerances acc. to DIN ISO 13715

Surface finish DIN EN ISO 1302

Replaces:

STABILUS

All dimensions are in mm

Marking of special characteristics according to STAB-Spec. 10270932

Scale: 2:1 (Original DIN A3)

Dimensions without tolerances DIN ISO 2768-mK

We reserve all rights to this document, to any patents or patent registrations related hereto, and to the duplication, retransmission by third parties and misc. use. Any use of this document is not permitted without the written consent of STABILUS.

PISTON ROD

	Date	Name
Drawn by	01.06.2018	Höfer
Checked	08.04.2021	Klinkner

Document No.: 10254976

Material No.:

Ident. Doc.:

Erstelldatum: 7/7/2021 - 6:3