The print-out is not subject to the modification service.

Intended for internal and supplier use

EN

supp. No.	material no. processing and surface treatment acc. to STAB-Spec. 10006248 Tab. XVI (a) version 1		10028959 Tab. I (b) version 2	A overall length	E length without endfitting stud
39	291628		291628	217.5	208.0
40	293062		293062	309.0	299.5
41	504816		504816	211.5	202.0
42	506967		506967	235.5	226.0
43	507445		507445	204.0	194.5
44	507923		507923	203.5	194.0
45	508401		508401	291.0	281.5
46	509118		509118	273.0	263.5
47	510074		510074	258.0	248.5
48	510552		510552	282.0	272.5
49	512942		512942	249.0	239.5
50	516288		516288	102.0	92.5
51	517483		517483	234.0	224.5
52	520590		520590	246.0	236.5
53	528238		528238	276.0	266.5
54	529194		529194	221.0	211.5
55	538276		538276	219.5	210.0
56	540427		540427	292.0	282.5
57	541144		541144	238.0	228.5

version 1 (only self-manufacturing) * material: 010731

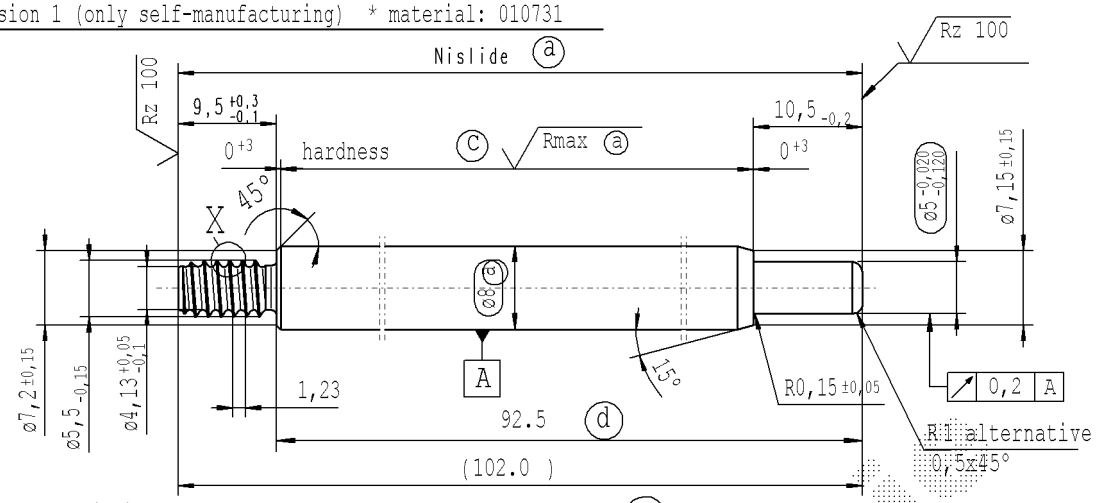

(c) before grinding:Hardness depth and hardness test acc. to STAB-Spec. 10258370

(d) tolerances: +0,2 -0,1 after turning
±0,3 after straightening
±0,3 after nisliding

version 2 (only external production) * material: 1.1193 S45C JISG 4051

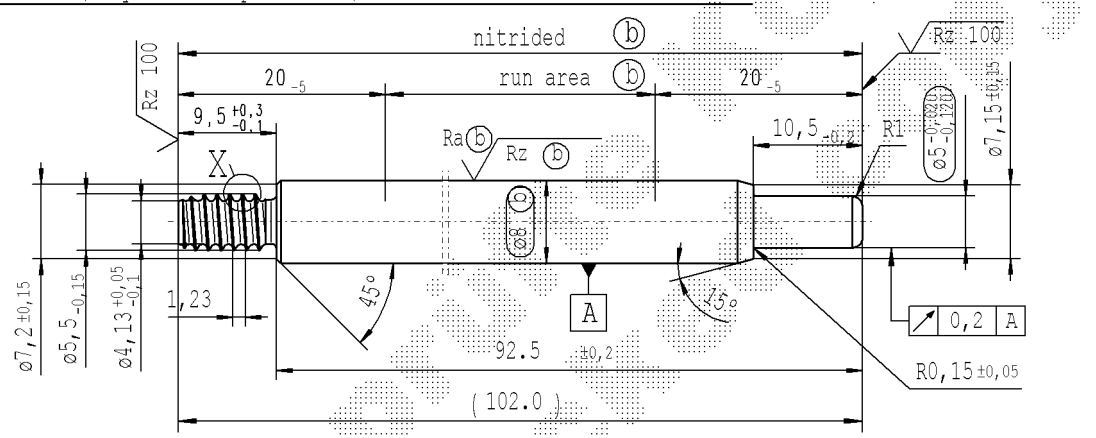

approved lengths: 50-600 mm

pre-worked: (only self-manufacturing)

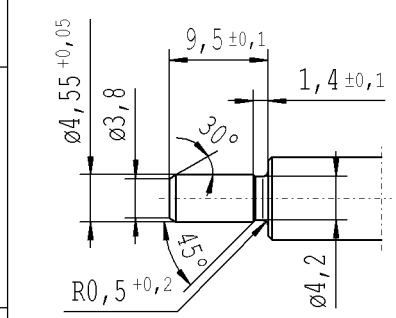

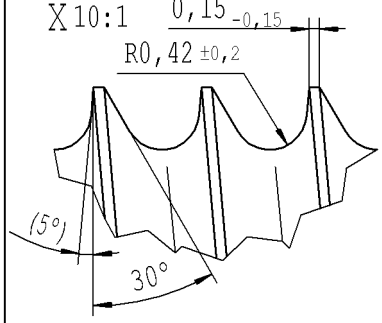

Rz 25 (Rz 100 Rmax (a) Ra (b) Rz (b)) +0,2 -0,2

sheet 3 of 5

AIAG CQI-standards acc. to STAB-Spec. 10027692

Environmental protection acc. to STAB-Spec. 10005649

DE: X	EN: X	ES:	IT:	PR: X	FR:	RO: X	CAD created document handwritten changes not permitted

new	no technical change, no new first sample required	(5°) no technical change, no new first sample required
old	Tab IV	5°
Field	C-F 8	B/6-7
Date/Name	16.12.2020 Hein	08.04.2021 Hein
Chg. No.	693200	696948
Rev.	3	3

Ident. Doc.:

Material:

Edge tolerances acc. to DIN ISO 13715

Surface finish: DIN EN ISO 1302

Replaces:

STABILUS

All dimensions are in mm

Scale: (Original DIN A3) 2:1

Marking of special characteristics according to STAB-Spec. 10270932

Dimensions without tolerances DIN ISO 2768-mK

We reserve all rights to this document, to any patents or patent registrations related hereto, and to the duplication, retransmission by third parties and misc. use. Any use of this document is not permitted without the written consent of STABILUS.

PISTON ROD

	Date	Name
Drawn by	01.06.2018	Höfer
Checked	08.04.2021	Klinkner

Document No.: 10254976

Material No.:

Erstelldatum: 7/7/2021 - 8:3