The print-out is not subject to the modification service.

Intended for internal and supplier use

EN

supp. No.	material no. processing and surface treatment acc. to STAB-Spec. 10006248 Tab.XVI (a) version 1		10028959 Tab. I (b) version 2	A overall length	E length without endfitting stud
20	043543		043543	177.0	168.5
21	167586		167586	240.0	231.5
22	381013		381013	249.0	240.5
23	396309		396309	151.0	142.5
24	396787		396787	255.0	246.5
25	397265		397265	123.0	114.5
26	397982		397982	270.0	261.5
27	410410		410410	167.5	159.0
28	415668		415668	300.0	291.5
29	420926		420926	369.0	360.5
30	422599		422599	150.0	141.5
31	437417		437417	132.0	123.5
32	438612		438612	129.0	120.5
33	443870		443870	256.0	247.5
34	444587		444587	228.0	219.5
35	457015		457015	204.0	195.5
36	465141		465141	191.0	182.5
37	467053		467053	174.0	165.5
38	483783		483783	207.0	198.5

pre-worked: (only self-manufacturing)

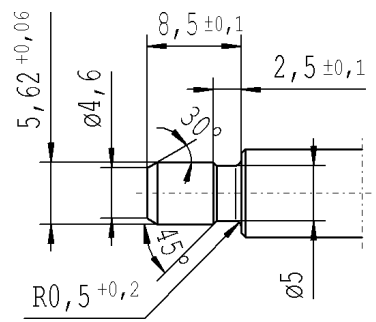

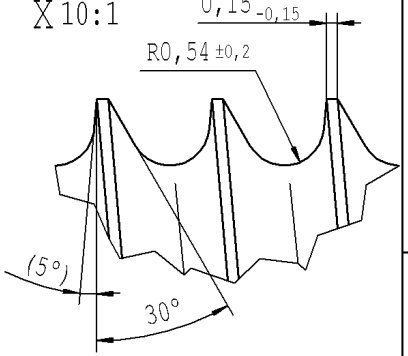

version 1 (only self-manufacturing) * material: 010731

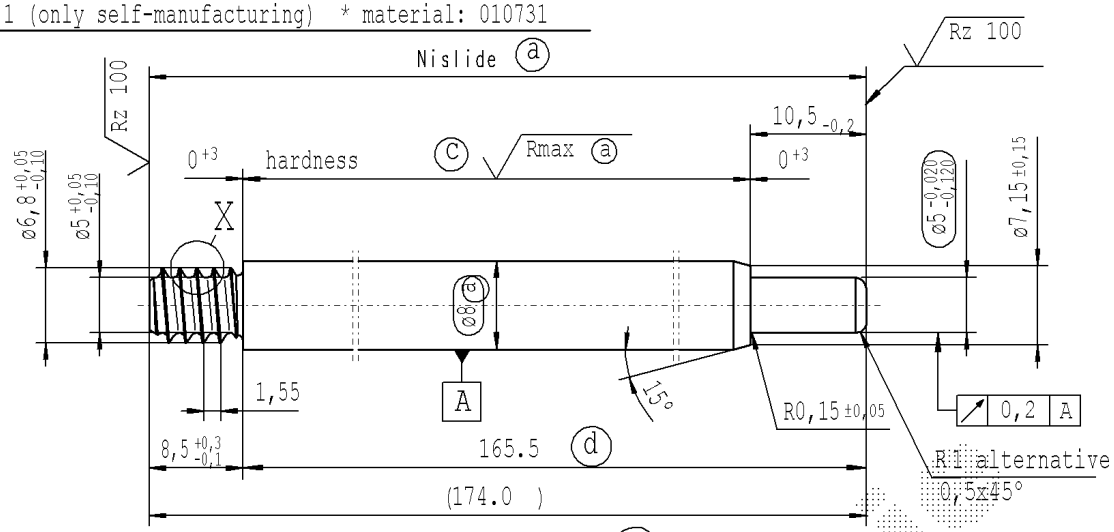

(c) before grinding:Hardness depth and hardness test acc. to STAB-Spec. 10258370

(d) tolerances: +0,2 -0,1 after turning
±0,3 after straightening
±0,3 after nisliding

version 2 (only external production) * material: 1.1193 S45C JISG 4051

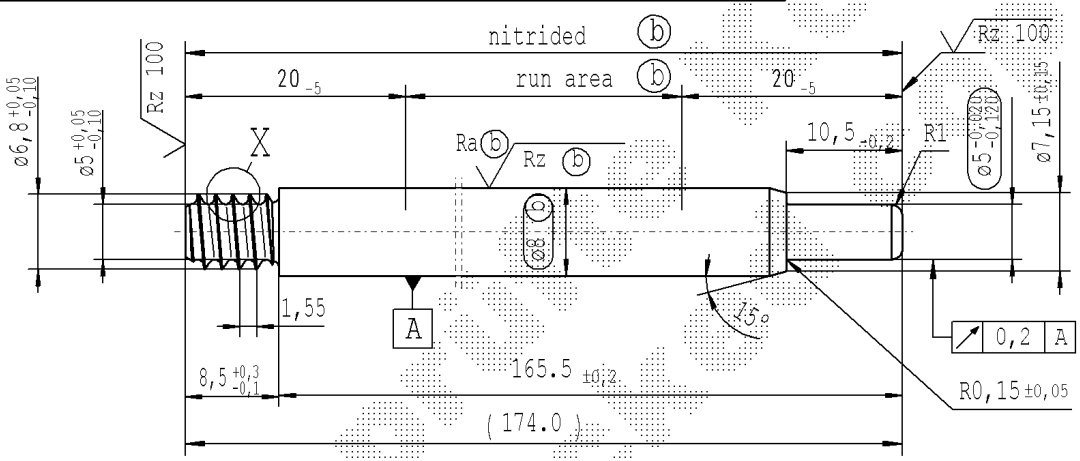

approved lengths: 50-600 mm

Rz 25 (Rz 100 Rmax (a) Ra (b) Rz (b)) +0,2 -0,2

sheet 2 of 6

AIAG CQI-standards acc. to STAB-Spec. 10027692

Environmental protection acc. to STAB-Spec. 10005649

DE: X	EN: X	ES:	IT:	PR: X	FR:	RO: X	CAD created document handwritten changes not permitted

new	±0,2 no technical change, no new first sample required	(5°) no technical change, no new first sample required
old	(d)	5°
Field	B/3	B/6-7
Date/Name	03.02.2021 Hein	08.04.2021 Hein
Chg. No.	694938	696948
Rev.	5	5

Material: *

Edge tolerances acc. to DIN ISO 13715

Surface finish: DIN EN ISO 1302

Replaces:

STABILUS

All dimensions are in mm

Scale: (Original DIN A3) 2:1

Marking of special characteristics according to STAB-Spec. 10270932

Dimensions without tolerances DIN ISO 2768-mK

We reserve all rights to this document, to any patents or patent registrations related hereto, and to the duplication, retransmission by third parties and misc. use. Any use of this document is not permitted without the written consent of STABILUS.

	Date	Name
Drawn by	30.03.2017	yamueller
Checked	08.04.2021	Klinkner

Document No.: 10243257

Material No.:

PISTON ROD

Ident. Doc.:

Bestelldatum: 22/9/2021 - 13:0