The print-out is not subject to the modification service.

Intended for internal and supplier use

EN

supp. No.	material no. processing and surface treatment acc. to STAB-Spec. 10006248 Tab. XVI optimized (a) version 1	10006248 Tab. X (a) version 1	10028959 Tab. I (b) version 2	A overall length	B thread length	E length without end-fitting stud
89	314097	314097	314097	273.0	10	263.0
90	322223	322223	322223	255.0	12	243.0
91	323418	323418	323418	243.0	12	231.0
92	335846	335846	335846	396.0	12	384.0
xx	xxxxxx	xxxxxx	xxxxxx	510	10	500

version 1 (only self-manufacturing) * material: 010715

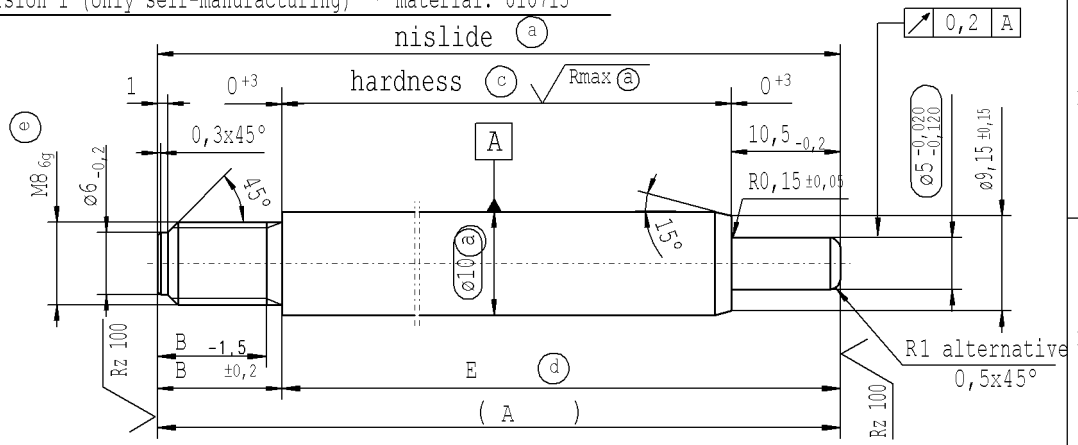

(c) before grinding: Hardness depth and hardness test acc. to STAB-Spec. 10258370

(e) threaded stud rough-turned dim. ø7,14 -0,06
thread roll tolerance 6e
thread tolerances acc. to DIN ISO 965-3

(d) tolerances: +0,2 -0,1 after turning;
±0,3 after straightening;
±0,3 after nisliding

version 2 (only external production) * material: 1.1193 S45C JISG 4051

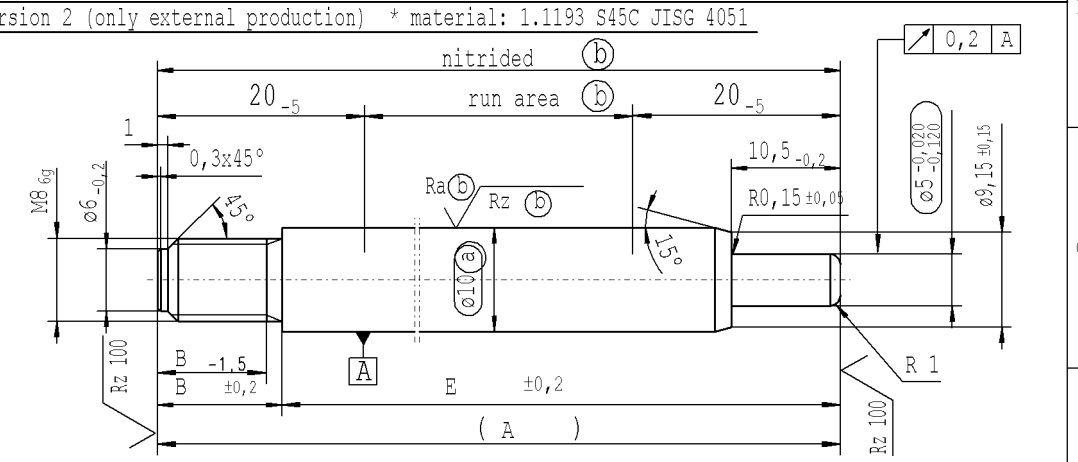

thread tolerances acc. to DIN ISO 965-3

approved lengths: 50-600 mm

Rz 25 (Rz 100 Rmax (a) Ra (b) Rz (b)) +0,2 -0,2

sheet 4 of 4

AIAG CQI-standards acc. to STAB-Spec. 10027692

Environmental protection acc. to STAB-Spec. 10005649

DE: X	EN: X	ES:	IT:	PR:	FR:	RO: X	CAD created document; handwritten changes not permitted

new	(c) = acc. STAB-Spec. 10258370	new format Internal/Supplier	Tab XVI; no technical change, no new first sample required
old	(c) = RHT 0,4 .... 0,7 mm	Supplier drawing separately	Tab IV;
Field	B 7-8	-	F 8
Date/Name	15.05.2019 Donat	08.06.2020 Höfer	16.08.2021 Donat
Chg. No.	678703	688987	699704
Rev.	3	4	4

Material: *

Edge tolerances acc. to DIN ISO 13715

Surface finish DIN EN ISO 1302

Replaces:

STABILUS

All dimensions are in mm

Marking of special characteristics according to STAB-Spec. 10270932

Scale: (Original DIN A3) 2:1

Dimensions without tolerances DIN ISO 2768-mK

We reserve all rights to this document, to any patents or patent registrations related hereto, and to the duplication, retransmission by third parties and misc. use. Any use of this document is not permitted without the written consent of STABILUS.

PISTON ROD

	Date	Name
Drawn by	28.09.2009	K.Marx
Checked	16.08.2021	Milles

Document No.: 10166619

Material No.:

Ident. Doc.:

Erstelldatum: 20/12/2021 - 8:53