supp. No.	material no.				A overall length	B thread length
	processing and surface treatment acc. to STAB-Spec.					
	10006248 Tab. XVI optimized (a) version 1	10006248 Tab. V (a) version 1	10006248 Tab. X (a) version 1	10028959 Tab. I (b) version 2		
64	642482		642482	642482	240.0	10
65	642960		642960	642960	417.0	10
66	645111		645111	645111	303.0	10
67	686219		686219	686219	222.0	10
68	688370		688370	688370	159.0	10
69	704622		704622	704622	132.0	10
70	730673		730673	730673	279.0	10
71	972780		972780	972780	189.0	10
72	997636		997636	997636	222.0	6
73	073424		073424	073424	127.0	10
74	113815		113815	113815	171.0	10
75	127438		127438	127438	198.0	10
76	146319		146319	146319	660.0	10
77	148231		148231	148231	291.0	10
xx	xxxxxx		xxxxxx	xxxxxx	144	8

version 1 (only self-manufacturing) * material: 010731

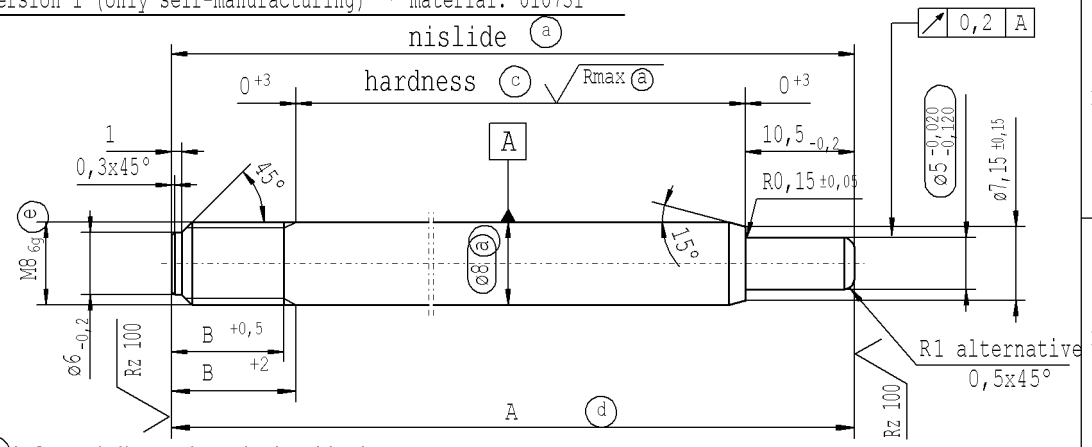

(c) before grinding: Hardness depth and hardness test acc. to STAB-Spec. 10258370

(e) threaded stud rough-turned dim. ø7,14 -0,06
thread roll tolerance 6e
thread tolerances acc. to DIN ISO 965-3

(d) tolerances: +0,2 -0,1 after turning;
±0,3 after straightening;
±0,3 after nisliding

version 2 (only external production) * material: 1.1193 S45C JISG 4051

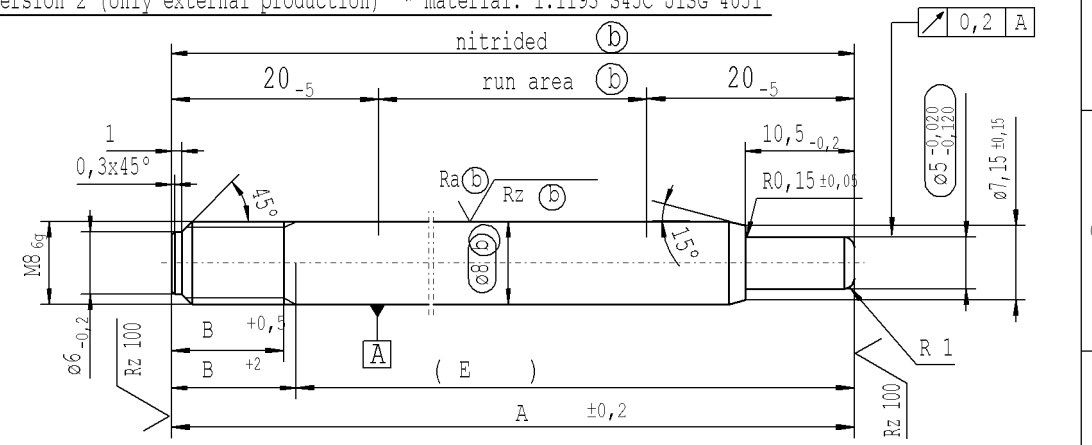

thread tolerances acc. to DIN ISO 965-3

approved lengths: 100-600 mm

Rz 25 (Rz 100 Rmax (a) Ra (b) Rz (b)) +0,2 -0,2

AIAG CQI-standards acc. to STAB-Spec. 10027692

Environmental protection acc. to STAB-Spec. 10005649

DE: X	EN: X	ES:	IT:	PR:	FR:	RO: X	CAD created document; handwritten changes not permitted

new	(c) = acc. STAB-Spec. 10258370	new format Internal/Supplier	Tab XVI; no technical change, no new first sample required
old	(c) = RHT 0,4 .... 0,7 mm	Supplier drawing separately	Tab IV;
Field	C8	-	F 8
Date/Name	06.06.2019 Höfer	17.09.2020 Donat	16.08.2021 Donat
Chg. No.	678546	691413	699704
Rev.	6	7	7

Material: *

Edge tolerances acc. to DIN ISO 13715

Surface finish DIN EN ISO 1302

Replaces:

STABILUS

All dimensions are in mm

Scale: (Original DIN A3) 2:1

Marking of special characteristics according to STAB-Spec. 10270932

Dimensions without tolerances DIN ISO 2768-mK

We reserve all rights to this document, to any patents or patent registrations related hereto, and to the duplication, retransmission by third parties and misc. use. Any use of this document is not permitted without the written consent of STABILUS.

PISTON ROD

	Date	Name
Drawn by	05.03.2014	Höfer
Checked	16.08.2021	Milles

Document No.: 10210124

Material No.:

The print-out is not subject to the modification service.
Intended for internal and supplier use
EN
Erstelldatum: 30/11/2021 - 8:18
Ident. Doc.: