supp. No.	material no. processing and surface treatment acc. to STAB-Spec. 10006248 Tab. XVI optimized (a) version 1	10006248 Tab. X (a) version 1	10028959 Tab. I (b) version 2	A overall length	B thread length	E length without end-fitting stud
176	554771	554771	554771	291.0	10	281.0
177	556444	556444	556444	555.0	10	545.0
178	618584	618584	618584	273.0	12	261.0
179	620496	620496	620496	399.0	12	387.0
180	620974	620974	620974	285.0	12	273.0
181	622647	622647	622647	735.0	12	723.0
182	627666	627666	627666	480.0	10	470.0
183	629817	629817	629817	210.0	10	200.0
184	634358	634358	634358	459.0	12	447.0
185	635314	635314	635314	354.0	10	344.0
186	650371	650371	650371	314.0	10	304.0
187	658975	658975	658975	447.0	12	435.0
188	661365	661365	661365	228.0	12	216.0
189	663516	663516	663516	345.0	12	333.0
190	666862	666862	666862	312.0	10	302.0
191	679051	679051	679051	99.0	12	87.0
192	721354	721354	721354	543.0	8	535.0
193	723744	723744	723744	207.0	8	199.0
194	819583	819583	819583	564.0	10	554.0
195	243355	243355	243355	117.0	16	101.0
196	861647	861647	861647	480.0	12	468.0
197	885069	885069	885069	150.0	8	142.0
198	888654	888654	888654	180.0	8	172.0
199	346603	346603	346603	648.0	16	632.0

version 1 (only self-manufacturing) * material: 010715

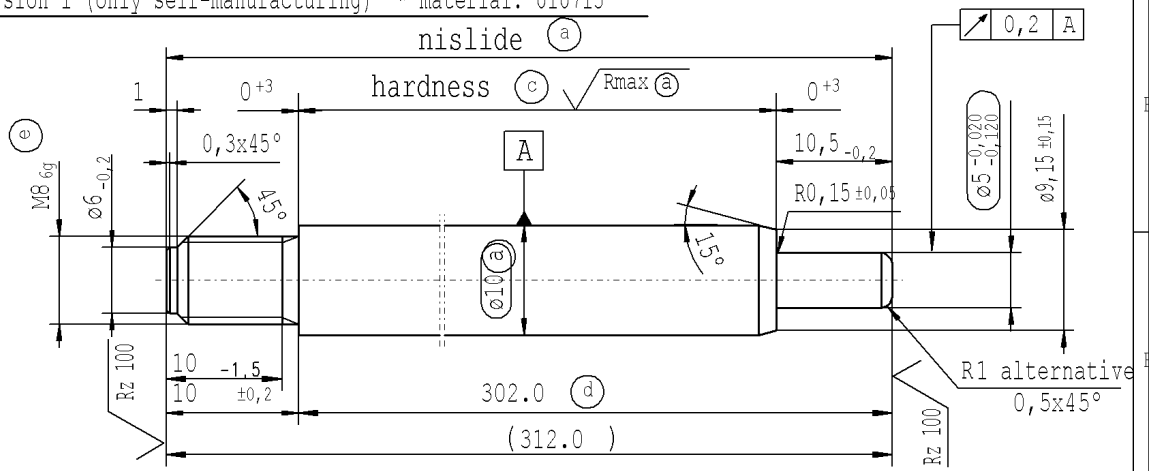

(c) before grinding: Hardness depth and hardness test acc. to STAB-Spec. 10258370

(e) threaded stud rough-turned dim. ø7,14 -0,06
thread roll tolerance 6e
thread tolerances acc. to DIN ISO 965-3

(d) tolerances: +0,2 -0,1 after turning
±0,3 after straightening
±0,3 after nisliding

version 2 (only external production) * material: 1.1193 S45C JISG 4051

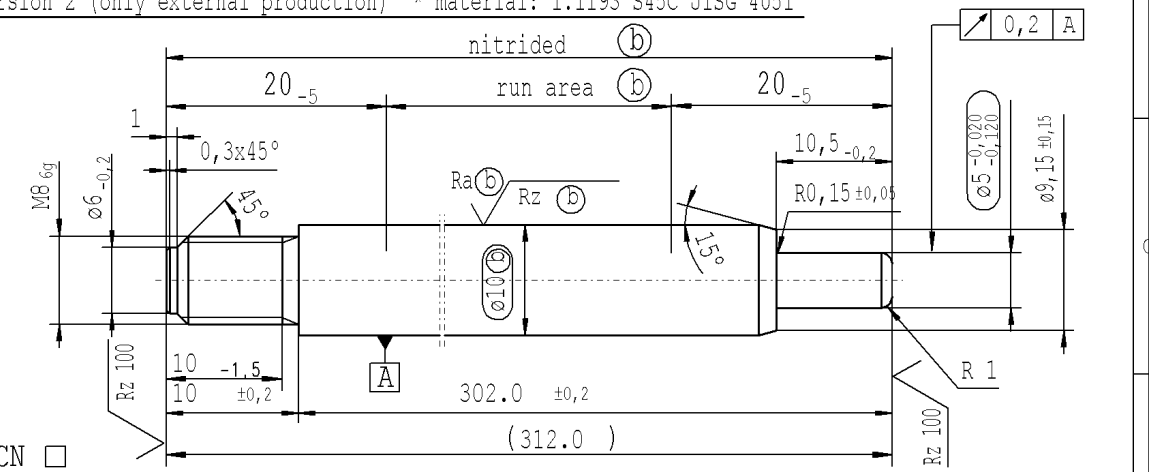

ZS CN ☐
ZS RO ☒

thread tolerances acc. to DIN ISO 965-3

approved lengths: 50-600 mm

Rz 25 (Rz 100 Rmax (a) Ra (b) Rz (b)) +0,2 -0,2

sheet 7 of 7

AIAG CQI-standards acc. to STAB-Spec. 10027692

Environmental protection acc. to STAB-Spec. 10005649

DE: X	EN: X	ES:	IT:	PR:	FR:	RO: X	CAD created document handwritten changes not permitted

new	Tab XVI no technical change, no new first sample required	ø10 (b) ZS CN / ZS RO no technical change, no new first sample required
old	Tab IV	ø10 (a) -
Field	F 8	C/3 B/5
Date/Name	16.08.2021 Donat	21.03.2022 Hein
Chg. No.	699704	708492
Rev.	4	4

Material: *

Edge tolerances acc. to DIN ISO 13715

Surface finish DIN EN ISO 1302

Replaces:

STABILUS

All dimensions are in mm

Marking of special characteristics according to STAB-Spec. 10270932

Scale: (Original DIN A3) 2:1

Dimensions without tolerances DIN ISO 2768-mK

We reserve all rights to this document, to any patents or patent registrations related hereto, and to the duplication, retransmission by third parties and misc. use. Any use of this document is not permitted without the written consent of STABILUS.

PISTON ROD

	Date	Name
Drawn by	28.09.2009	K.Marx
Checked	21.03.2022	Klinkner

Document No.: 10166619

Material No.:

The print-out is not subject to the modification service.
Intended for internal and supplier use
EN
Erstelldatum: 17/5/2022 - 14:26
Ident. Doc.:
***** Druckdatum: 17.05.2022 / 14:26:56 ***** Ausdruck nicht massgetreu *****