The print-out is not subject to the modification service.

Intended for internal and supplier use

EN

supp. No.	material no. processing and surface treatment acc. to STAB-Spec. 10006248 Tab. XVI optimized (a) version 1	10006248 Tab. X (a) version 1	10028959 Tab. I (b) version 2	A overall length	E length without endfitting stud
142	058846	058846	058846	99.0	90.5
143	102583	102583	102583	120.0	111.5
144	183604	183604	183604	126.0	117.5
145	235945	235945	235945	141.0	132.5
146	240247	240247	240247	513.0	504.5
147	246461	246461	246461	296.0	287.5
148	323658	323658	323658	528.0	519.5
149	324853	324853	324853	192.0	183.5
150	349231	349231	349231	411.0	402.5
151	356401	356401	356401	207.0	198.5
152	396075	396075	396075	93.0	84.5
153	514141	514141	514141	108.0	99.5
154	043073	043073	043073	342.0	333.5
155	761029	761029	761029	396.0	387.5

version 1 (only self-manufacturing) * material: 010715

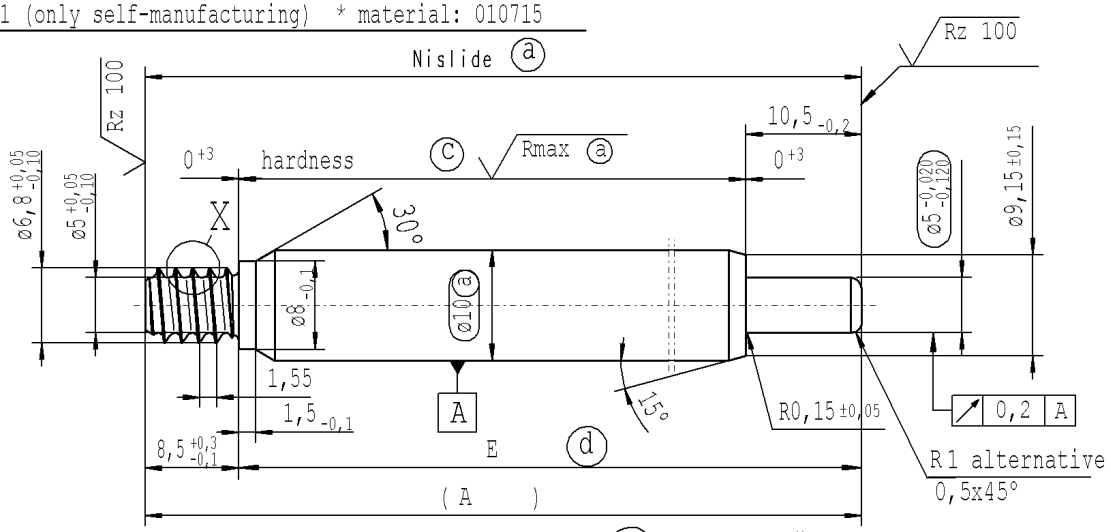

(c) before grinding: Hardness depth and hardness test acc. to STAB-Spec. 10258370

(d) tolerances: ±0,2 / 0,1 after turning; ±0,3 after straightening; ±0,3 after nisliding

version 2 (only external production) * material: 1.1193 S45C JISG 4051

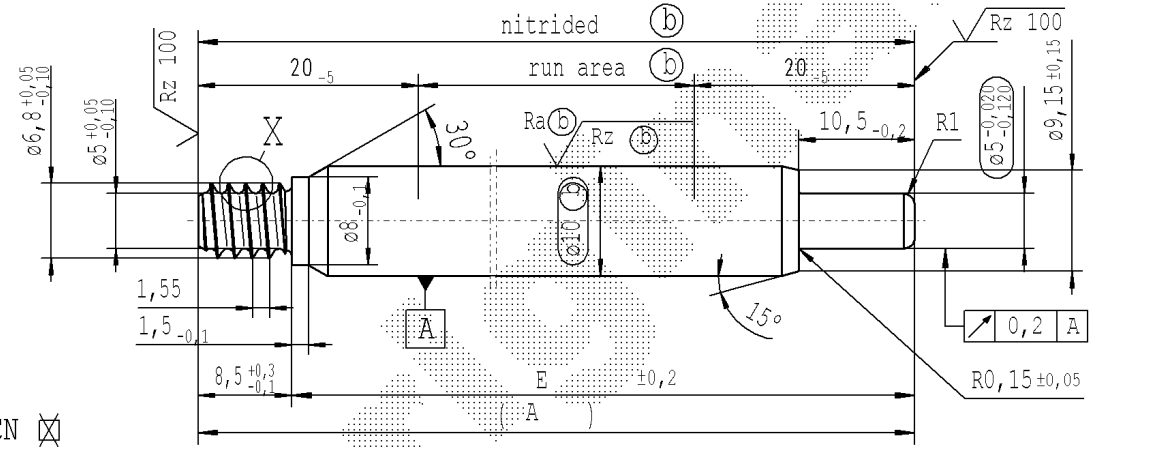

ZS CN ☒
ZS RO ☒

approved lengths: 50-600 mm

pre-worked: (only self-manufacturing)

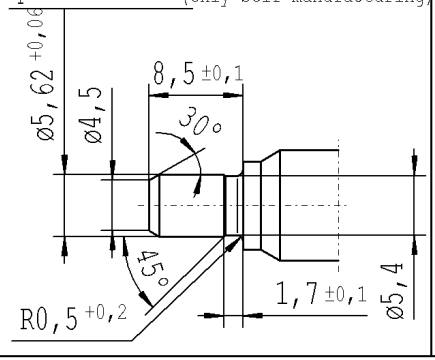

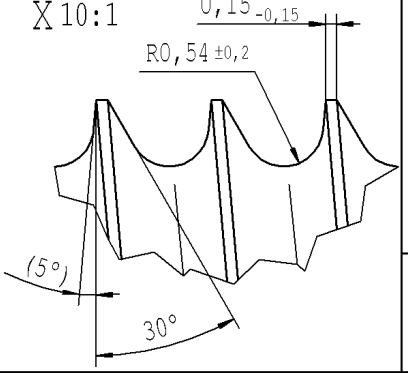

Rz 25 (Rz 100 Rmax (a) Ra (b) Rz (b)) +0,2 -0,2

sheet 8 of 8

AIAG CQI-standards acc. to STAB-Spec. 10027692

Environmental protection acc. to STAB-Spec. 10005649

DE: X	EN: X	ES:	IT:	PR:	FR:	RO: X	CAD created document; handwritten changes not permitted

new	Tab XVI; no technical change, no new first sample required	ZS CN / ZS RO; no technical change, no new first sample required
old	Tab IV;	-
Field	F 8	B/5
Date/Name	12.08.2021 Donat	10.03.2022 Hein
Chg. No.	699704	707979
Rev.	13	13

Material: *

Edge tolerances acc. to DIN ISO 13715

Surface finish DIN EN ISO 1302

Replaces:

STABILUS

All dimensions are in mm

Marking of special characteristics according to STAB-Spec. 10270932

Scale: (Original DIN A3) 2:1

Dimensions without tolerances DIN ISO 2768-mK

We reserve all rights to this document, to any patents or patent registrations related hereto, and to the duplication, retransmission by third parties and misc. use. Any use of this document is not permitted without the written consent of STABILUS.

	Date	Name
Drawn by	17.12.2007	C.Hein
Checked	11.03.2022	Klinkner

Document No.: 10151520

Material No.:

PISTON ROD

Ident. Doc.:

Erstelldatum: 7/7/2022 - 11:7