supp. No.	material no. (processing and surface treatment acc. to STAB-Spec.) 10006248 Tab. XVI optimized (a) version 1	10006248 Tab. X (a) version 1	10028959 Tab. I (b) version 2	A overall length	B thread length	E length without end-fitting stud
1	381974	381974	381974	174	12	162
2	383169	383169	383169	336	12	324
3	383647	383647	383647	318	12	306
4	384125	384125	384125	132	10	122
5	905623	905623	905623	129	8	121

version 1 (only self-manufacturing) * material: 010715

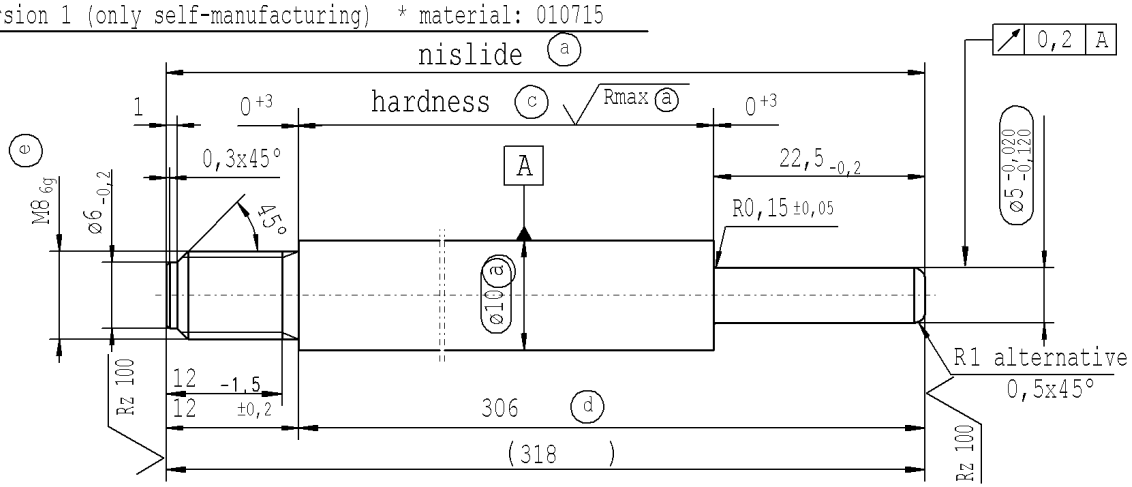

(c) before grinding: Hardness depth and hardness test acc. to STAB-Spec. 10258370

(e) threaded stud rough-turned dim. ø7,14 -0,06
thread roll tolerance 6e
thread tolerances acc. to DIN ISO 965-3

(d) tolerances: +0,2 -0,1 after turning
±0,3 after straightening
±0,3 after nisliding

version 2 (only external production) * material: 1.1193 S45C JISG 4051

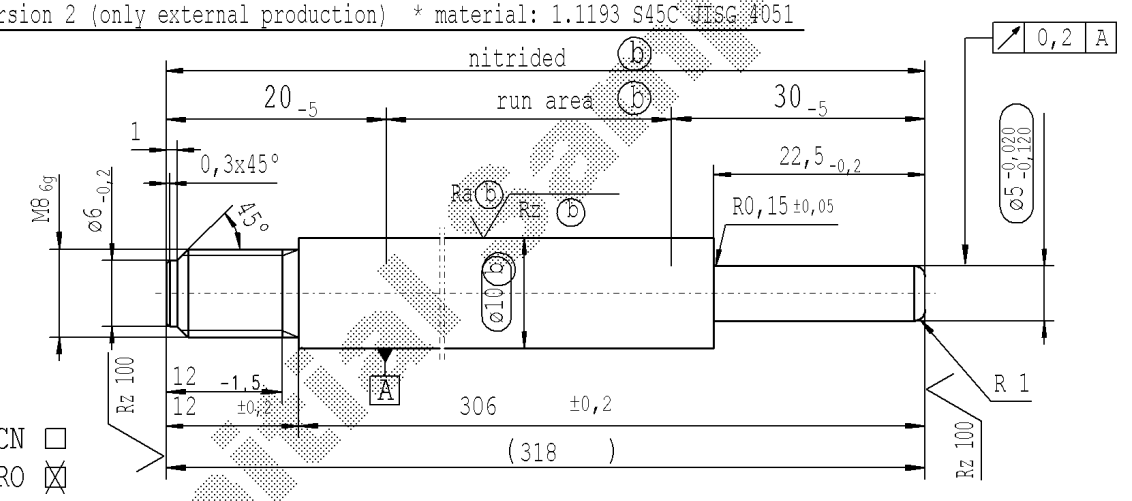

ZS CN ☐
ZS RO ☒

thread tolerances acc. to DIN ISO 965-3

approved lengths: 50-600 mm

Rz 25 (Rz 100 Rmax (a) Ra (b) Rz (b)) +0,2 -0,2

sheet 1 of 1

AIAG CQI-standards acc. to STAB-Spec. 10027692

Environmental protection acc. to STAB-Spec. 10005649

DE: X | EN: X | ES: | IT: | PR: | FR: | RO: X | CAD created document handwritten changes not permitted

new	Initial Release
old	-
Field	-
Date/Name	15.03.2022 Donat
Chg. No.	-
Rev.	0

Material: *

Edge tolerances acc. to DIN ISO 13715

Surface finish DIN EN ISO 1302

Replaces:

STABILUS

All dimensions are in mm

Marking of special characteristics according to STAB-Spec. 10270932

Scale: (Original DIN A3) 2:1

Dimensions without tolerances DIN ISO 2768-mK

We reserve all rights to this document, to any patents or patent registrations related hereto, and to the duplication, retransmission by third parties and misc. use. Any use of this document is not permitted without the written consent of STABILUS.

PISTON ROD

	Date	Name
Drawn by	15.03.2022	Donat
Checked	15.03.2022	Klinkner

Document No.: 10304981

Material No.:

The print-out is not subject to the modification service.
Intended for internal and supplier use
EN
Erstelldatum: 2/5/2022 - 7:2
Ident. Doc.: