The print-out is not subject to the modification service.

Intended for internal and supplier use

EN

| supp. No. | material no. processing and surface treatment acc. to STAB-Spec. 10006248 Tab. XVI optimized (a) version 1 | 10006248 Tab. X (a) version 1 | 10028959 Tab. I (b) version 2 | A overall length | E length without endfitting stud |
|---|---|---|---|---|---|
| 1 | 210610 | 210610 | 210610 | 444 | 435.5 |
| 2 | 217541 | 217541 | 217541 | 474 | 465.5 |
| 3 | 218497 | 218497 | 218497 | 393 | 384.5 |
| 4 | 225906 | 225906 | 225906 | 402 | 393.5 |
| 5 | 229252 | 229252 | 229252 | 282 | 273.5 |
| 6 | 045701 | 045701 | 045701 | 288 | 279.5 |
| 7 | 049047 | 049047 | 049047 | 216 | 207.5 |
| 8 | 062670 | 062670 | 062670 | 234 | 225.5 |
| 9 | 070557 | 070557 | 070557 | 369 | 360.5 |
| 10 | 099476 | 099476 | 099476 | 315 | 306.5 |
| 11 | 099954 | 099954 | 099954 | 306 | 297.5 |
| 12 | 166157 | 166157 | 166157 | 210 | 201.5 |
| 13 | 260084 | 260084 | 260084 | 360 | 351.5 |
| 14 | 364527 | 364527 | 364527 | 321 | 312.5 |
| 15 | 375282 | 375282 | 375282 | 390 | 381.5 |
| 16 | 410415 | 410415 | 410415 | 300 | 291.5 |
| 17 | 515336 | 515336 | 515336 | 384 | 375.5 |
| 18 | 516053 | 516053 | 516053 | 420 | 411.5 |
| 19 | 518443 | 518443 | 518443 | 450 | 441.5 |

pre-worked: (only self-manufacturing)

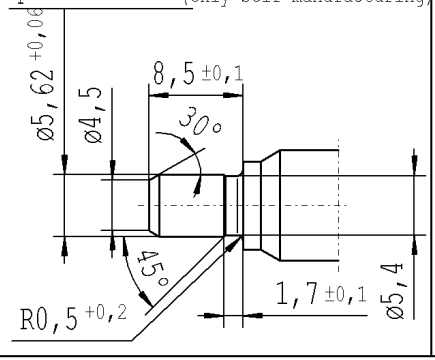


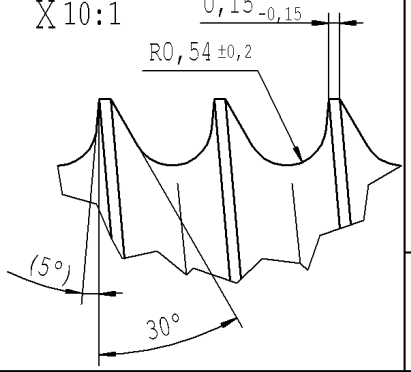


version 1 (only self-manufacturing) * material: 010715

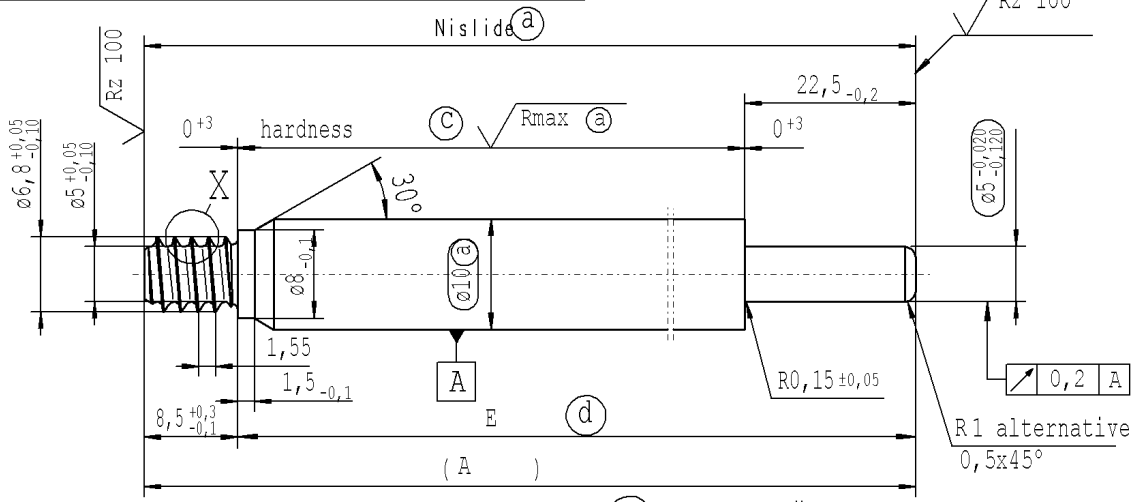


(c) before grinding: Hardness depth and hardness test acc. to STAB-Spec. 10258370

(d) tolerances: ±0,2 / 0,1 after turning; ±0,3 after straightening; ±0,3 after nisliding

version 2 (only external production) * material: 1.1193 S45C JISG 4051

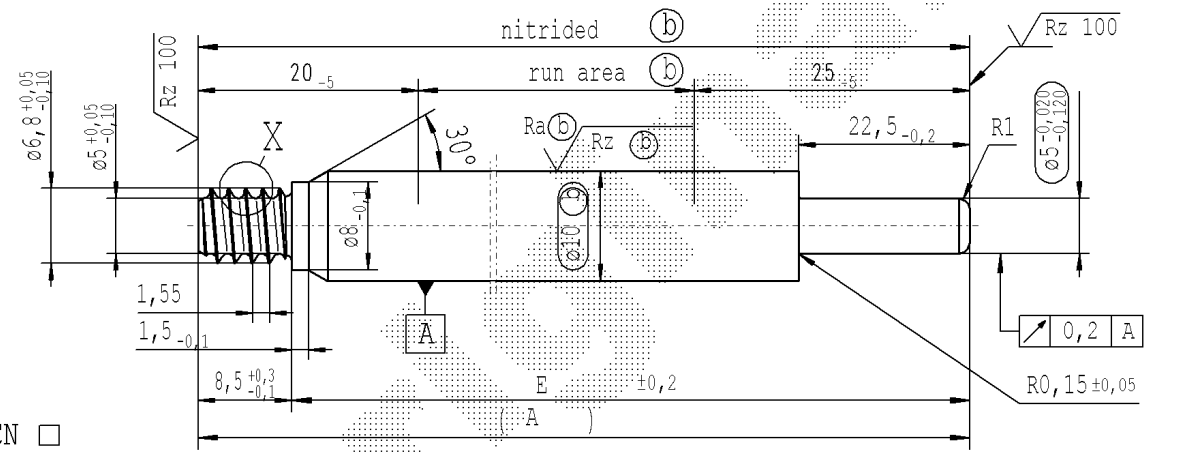


ZS CN ☐
ZS RO ☒

approved lengths: 50-600 mm

Rz 25 ( Rz 100 Rmax (a) Ra (b) Rz (b) ) +0,2 -0,2

sheet 1 of 2

AIAG CQI-standards acc. to STAB-Spec. 10027692

Environmental protection acc. to STAB-Spec. 10005649

| DE: X | EN: X | ES: | IT: | PR: | FR: | RO: X | CAD created document; handwritten changes not permitted |
|---|---|---|---|---|---|---|---|

| | | |
|---|---|---|
| new | INITIAL RELEASE | ZS CN / ZS RO; no technical change, no new first sample required |
| old | - | - |
| Field | - | B/5 |
| Date/Name | 08.12.2021 Donat | 10.03.2022 Hein |
| Chg. No. | - | 707983 |
| Rev. | 0 | 0 |

Material: *

Edge tolerances acc. to DIN ISO 13715

Surface finish DIN EN ISO 1302

Replaces:

STABILUS

All dimensions are in mm

Marking of special characteristics according to STAB-Spec. 10270932

Scale: (Original DIN A3) 2:1

Dimensions without tolerances DIN ISO 2768-mK

We reserve all rights to this document, to any patents or patent registrations related hereto, and to the duplication, retransmission by third parties and misc. use. Any use of this document is not permitted without the written consent of STABILUS.

| | Date | Name |
|---|---|---|
| Drawn by | 08.12.2021 | Donat |
| Checked | 10.03.2022 | Klinkner |

Document No.: 10300950

Material No.:

# PISTON ROD

Ident. Doc.:

Erstelldatum: 21/3/2022 - 11:57