The print-out is not subject to the modification service.

Intended for internal and supplier use

EN

supp. No.	material no. surface treatment processing acc. to STAB-Spec. 10006248 table XVI optimized Nislide black	table X Nislide "G"	A overall length	B stud length piston side	C version
1	736403	736403	261	10.5	1
2	762932	762932	237	10.5	1
3	765083	765083	162	10.5	1
4	749310	749310	222	10.5	1

version 1

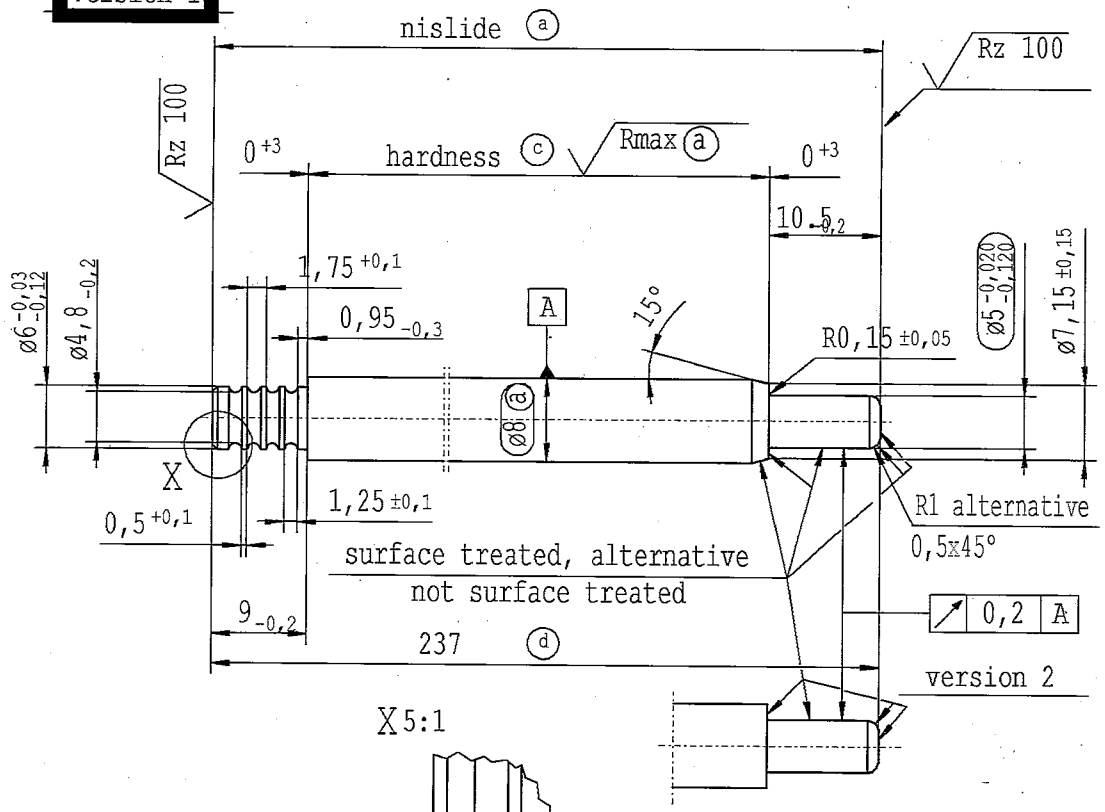

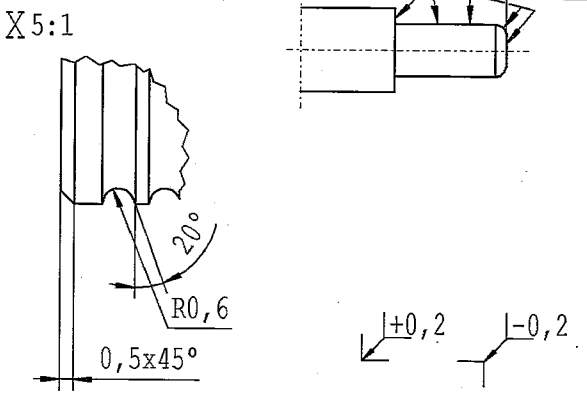

(a) piston rod processing per STAB-Spec. 10006248

(c) before grinding:
Hardness depth and hardness test acc. to STAB-Spec. 10258370

(d) tolerance $^{+0,2}_{-0,1}$ after turning
±0,3 after straightening
±0,3 after chroming/nisliding

Rz 25 (Rz 100 Rmax (a))

sheet 1 of 1

AIAG CQI-standards acc. to STAB-Spec. 10027692

Environmental protection acc. to STAB-Spec. 10005649

DE: X | EN: X | ES: | IT: | PR: | FR: | RO: X | CAD created document handwritten changes not permitted

new	INITIAL RELEASE
old	-
Field	-
Date/Name	13.03.2020 Jablonski
Chg. No.	-
Rev.	0

Material: mat.no. 010731

Edge tolerances acc. to DIN ISO 13715

Surface finish DIN EN ISO 1302

Replaces:

STABILUS

All dimensions are in mm

Marking of special characteristics according to STAB-Spec. 10270932

Scale: (Original DIN A3) 2:1

Dimensions without tolerances DIN ISO 2768-mK

We reserve all rights to this document, to any patents or patent registrations related hereto, and to the duplication, retransmission by third parties and misc. use. Any use of this document is not permitted without the written consent of STABILUS.

	Date	Name
Drawn by	13.03.2020	Jablonski
Checked	13.03.2020	Milles

Document No.: 10275928

Material No.:

PISTON ROD

Ident. Doc.:

Erstelldatum: 3/7/2020 - 9:39