The print-out is not subject to the modification service.

Intended for internal and supplier use

EN

supp. No.	material no. processing and surface treatment acc. to STAB-Spec. 10006248 Tab. XVI optimized (a) version 1	10006248 Tab. X (a) version 1	10028959 Tab. I (b) version 2	A overall length	B length without endfitting stud
1	240205	240205	240205	201	191.5
2	483509	483509	483509	303	293.5
3	425445	425445	425445	102	92.5
4	425684	425684	425684	300	290.5
5	426162	426162	426162	402	392.5
6	426401	426401	426401	501	491.5
7	426640	426640	426640	600	590.5
8	407521	407521	407521	228	218.5
9	527760	527760	527760	345	335.5

version 1 (only self-manufacturing) * material: 010715

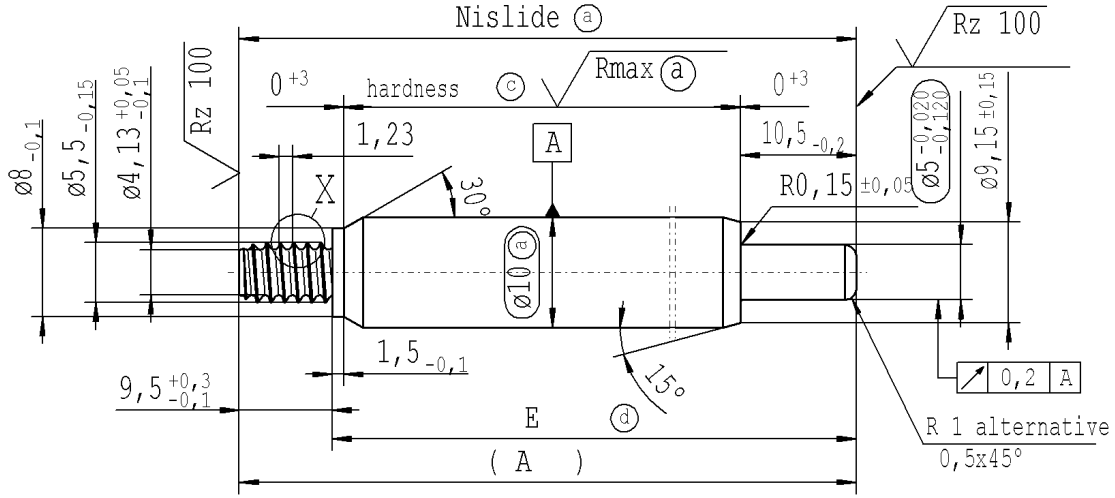

(c) RHT 0,4..0,7 mm before grinding, ≥ 68 HRA (acc. to DIN ISO 6508);

(d) tolerances: +0,2 -0,1 after turning; ±0,3 after straightening; ±0,3 after nisliding

version 2 (only external production) * material: 1.1193 S45C JISG 4051

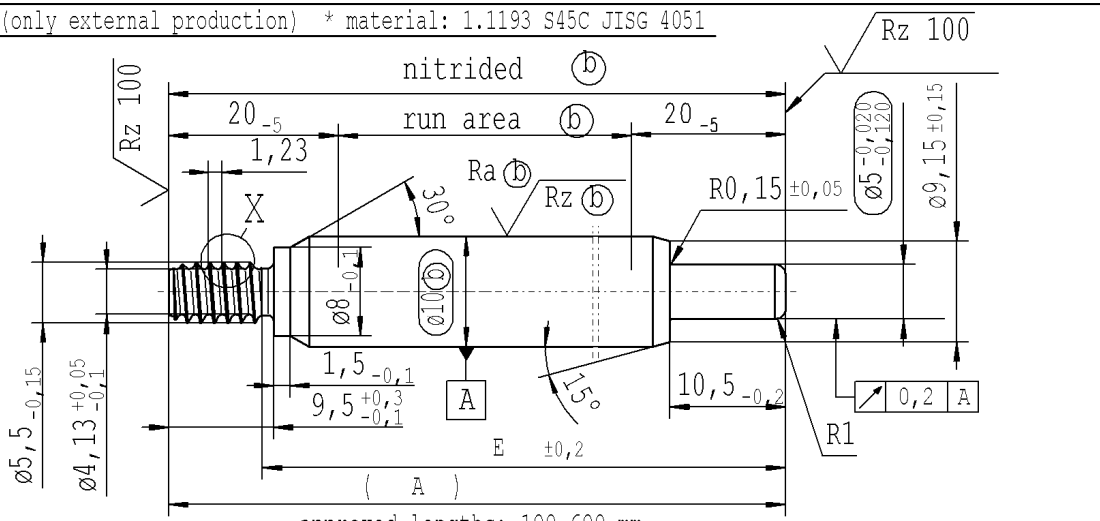

pre-worked: (only self-manufacturing) X 10:1

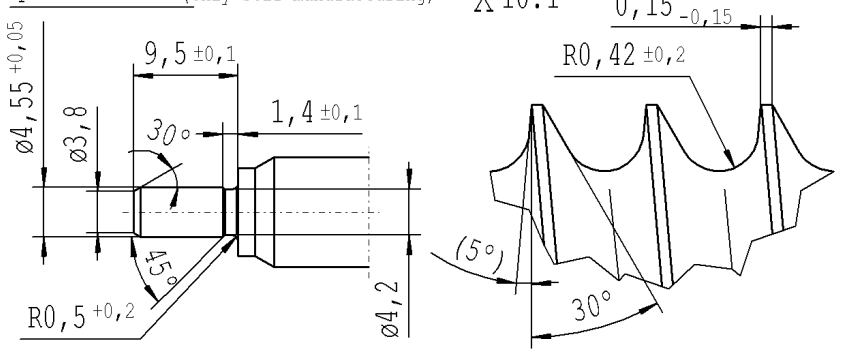

Rz 25 (Rz 100 Rmax (a) Ra (b) Rz (b)) +0,2 -0,2

sheet 1 of 1

AIAG CQI-standards acc. to STAB-Spec. 10027692

Environmental protection acc. to STAB-Spec. 10005649

DE: X	EN: X	ES:	IT:	PR:	FR:	RO: X	CAD created document; handwritten changes not permitted

new	Tab XVI; no technical change, no new first sample required	ø8 -0,1 ; self-manufacturing changed, no new first sample required
old	Tab IV;	ø8 ±0,15
Field	F 8	F/5
Date/Name	16.08.2021 Donat	19.11.2021 Hein
Chg. No.	699704	701881
Rev.	4	5

Material: *

Edge tolerances acc. to DIN ISO 13715

Surface finish DIN EN ISO 1302

Replaces:

STABILUS

All dimensions are in mm

Marking of special characteristics according to STAB-Spec. 10270932

Scale: (Original DIN A3) 2:1

Dimensions without tolerances DIN ISO 2768-mK

We reserve all rights to this document, to any patents or patent registrations related hereto, and to the duplication, retransmission by third parties and misc. use. Any use of this document is not permitted without the written consent of STABILUS.

PISTON ROD

	Date	Name
Drawn by	26.04.2012	chein
Checked	19.11.2021	Klinkner

Document No.: 10188940

Material No.:

Ident. Doc.:

Erstelldatum: 17/12/2021 - 9:43