The print-out is not subject to the modification service.

Intended for internal and supplier use

EN

supp. No.	material no.			A	B
	processing and surface treatment acc. to STAB-Spec.:			overall length	threads-length thread-on-bar
	10006248 Tab. IV (a) version 1	10006248 Tab. X (a) version 1	10028959 Tab. I (b) version 2		
1		399422	399422	176.5	16

version 1 (only self-manufacturing) * material: 010146

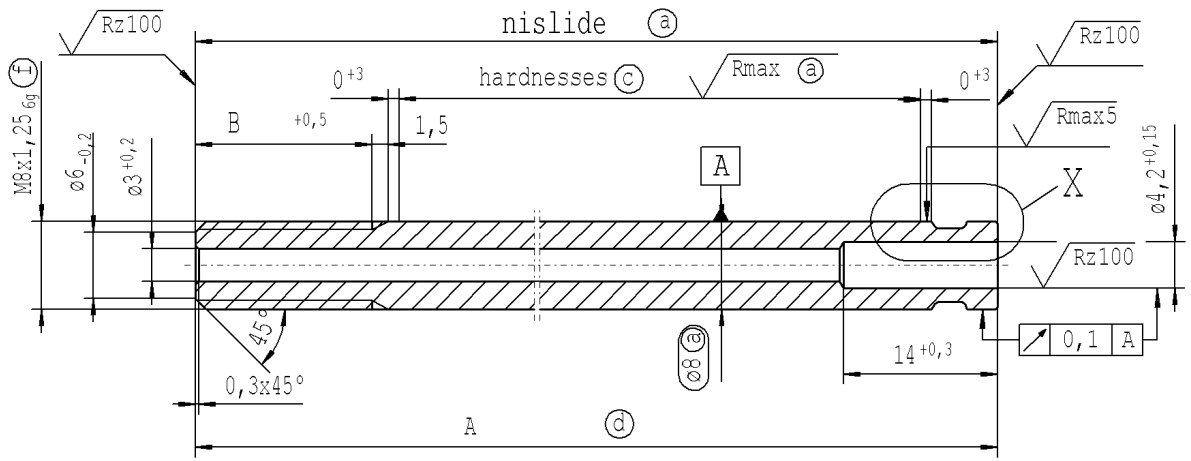

(c) before grinding:
Hardness depth and hardness test
acc. to STAB-Spec. 10258370

(d) tolerance
+0,1 -0,2 before thread-rolling
+0,2 -0,1 after thread-rolling
±0,3 after straightening
±0,3 after nisliding

(f) threaded stud pre-turned dim. ø7,14 -0,06
thread roll tolerance 6e
thread tolerances acc.to DIN ISO 965-3

version 2 (only external production) * material: 1.1193 S45C JISG 4051

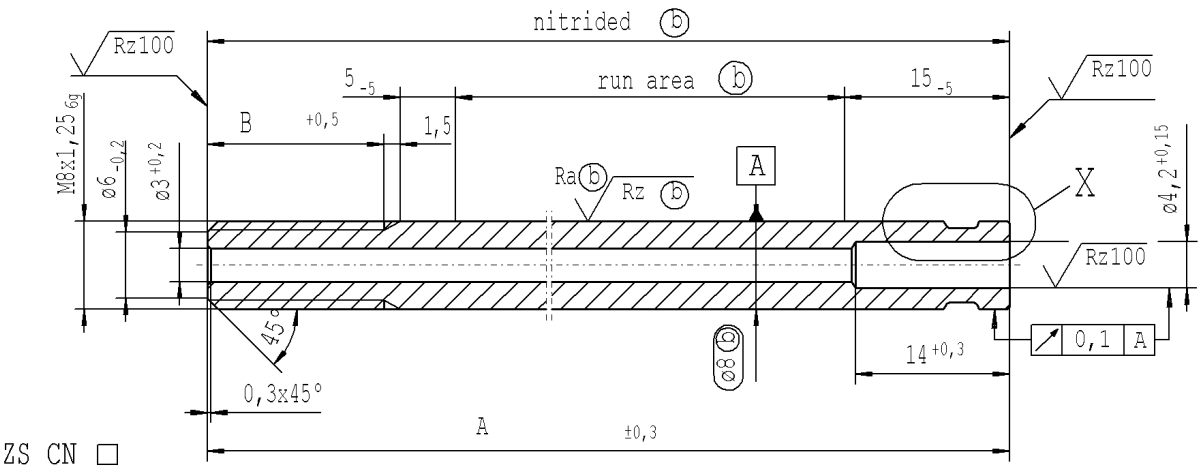

ZS CN ☐
ZS RO ☒

approved lengths: 60-550 mm

approved lengths thread: 16-35 mm

X pre-worked:
(only self-manufacturing)

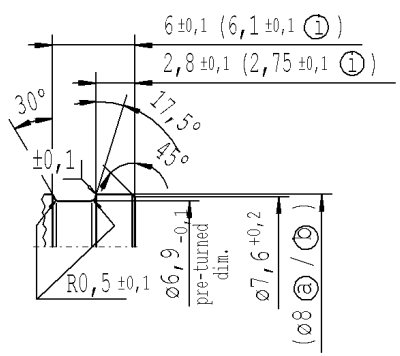

(i) dim. before grinding
at piston rod dia. 10,2 +0,1

X

Control dimension!
100 % visual checking

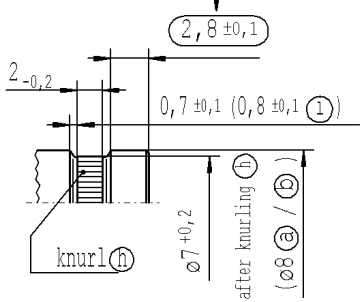

(h) knurl-profile manuf.
with knurl roll DIN 82 - RAA 0,5

100% cleanliness of through hole

√Rz 25 (√Rz 100 √Rmax5 √Rmax (a) Ra (b) √Rz (b))

+0,2 -0,2 (±0,1)

sheet 1
of 1

AIAG CQI-standards acc. to STAB-Spec. 10027692

Environmental protection acc. to STAB-Spec. 10005649

DE: X	EN: X	ES:	IT:	PR:	FR:	RO: X	CAD created document; handwritten changes not permitted

Ident. Doc.:	
new	INITIAL RELEASE
old	-
Field	-
Date/Name	19.05.2022 Hein
Chg. No.	-
Rev.	0

Material: *

Edge tolerances acc. to DIN ISO 13715

Surface finish DIN EN ISO 1302

Replaces:

STABILUS

All dimensions are in mm

Marking of special characteristics according to STAB-Spec. 10270932

Scale: (Original DIN A3) 2:1

Dimensions without tolerances DIN ISO 2768-mK

We reserve all rights to this document, to any patents or patent registrations related hereto, and to the duplication, retransmission by third parties and misc. use. Any use of this document is not permitted without the written consent of STABILUS.

PISTON ROD

	Date	Name
Drawn by	19.05.2022	Hein
Checked	19.05.2022	Tilea

Document No.: 10307575

Material No.:

Erstelldatum: 23/5/2022 - 7:55