The print-out is not subject to the modification service.

Intended for internal and supplier use

EN

supp. No.	material no. processing and surface treatment acc. to STAB-Spec. 10006248 Tab. XVI optimized (a) version 1	10006248 Tab. X (a) version 1	10028959 Tab. I (b) version 2	A overall length	B stud length endfitting side	E length without endfitting stud
1	228041	228041	228041	327	10	317
2	242624	242624	242624	303	9	294
3	243341	243341	243341	300	9	291
4	949592	949592	949592	249	10	239
5	686936	686936	686936	240	10	230
6	162332	162332	162332	204	10	194
7	453673	453673	453673	192	10	182
8	485699	485699	485699	318	9	309
9	948881	948881	948881	285	9	276
10	996203	996203	996203	318	10	308
11	037336	037336	037336	324	10	314
12	418780	418780	418780	192	9	183
13	626234	626234	626234	234	9	225
14	223999	223999	223999	387	9	378
15	640577	640577	640577	258	9	249
16	797600	797600	797600	306	9	297
17	840381	840381	840381	324	9	315

version 1 (only self-manufacturing) * material: 010731

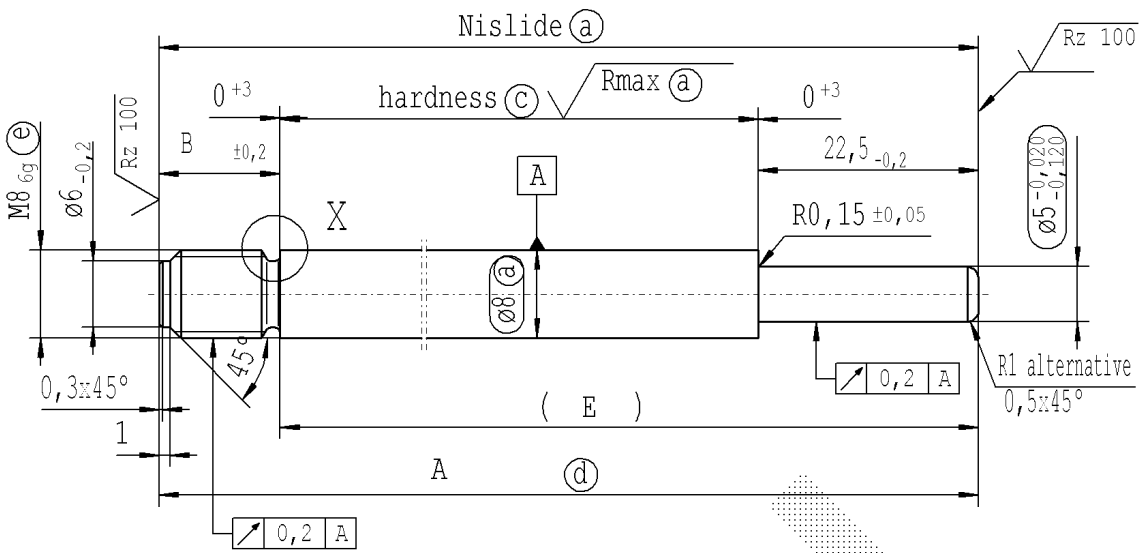

version 2 (only external production) * material: 1.1193 S45C JISG 4051

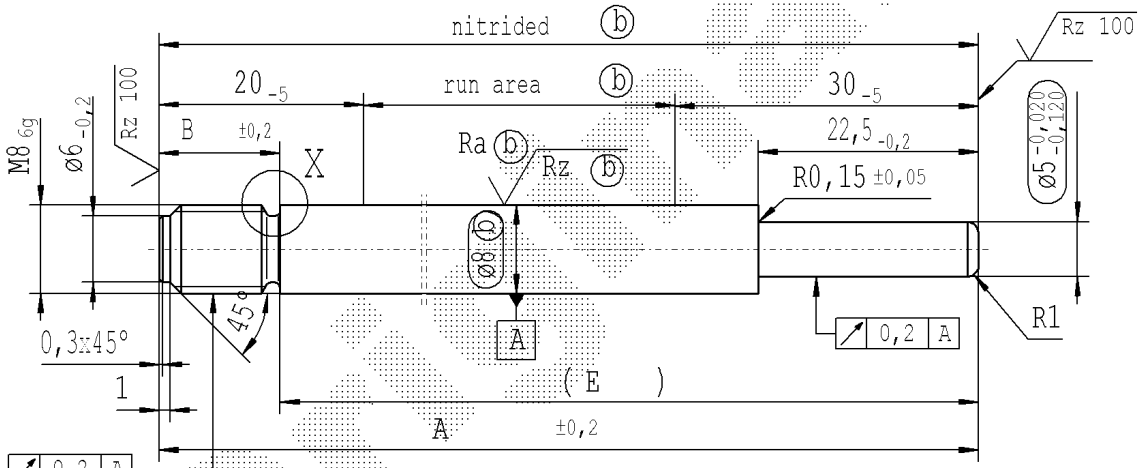

approved lengths: 100-600 mm

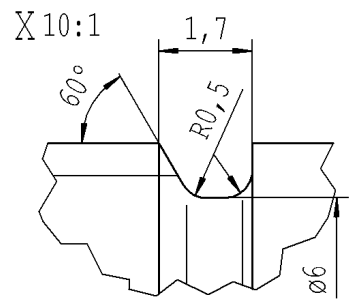

(c) before grinding:
Hardness depth and hardness test
acc. to STAB-Spec. 10258370

(d) tolerances: $^{+0,2}_{-0,1}$ after turning;
±0,3 after straightening;
±0,3 after nisliding

(e) threaded stud pre-turned
dimension ø7,14 $_{-0,06}$
thread roll tolerance 6e
thread tolerances acc. to DIN ISO 965-3

Rz 25 (Rz 100 Rmax (a) Ra (b) Rz (b)) +0,2 -0,2

sheet 1 of 1

AIAG CQI-standards acc. to STAB-Spec. 10027692

Environmental protection acc. to STAB-Spec. 10005649

DE: X	EN: X	ES:	IT:	PR:	FR:	RO: X	CAD created document; handwritten changes not permitted

new	(c) = acc. STAB-Spec. 10258370	new format Internal/Supplier	Tab XVI; no technical change, no new first sample required
old	(c) = RHT 0,4 .... 0,7 mm	Supplier drawing separately	Tab IV;
Field	B8	-	F 8
Date/Name	24.04.2019 Höfer	12.11.2020 Hein	16.08.2021 Donat
Chg. No.	678037	692034	699704
Rev.	2	3	3

Material: *

Edge tolerances acc. to DIN ISO 13715

Surface finish DIN EN ISO 1302

Replaces:

STABILUS

All dimensions are in mm

Marking of special characteristics according to STAB-Spec. 10270932

Scale: (Original DIN A3) 2:1

Dimensions without tolerances DIN ISO 2768-mK

We reserve all rights to this document, to any patents or patent registrations related hereto, and to the duplication, retransmission by third parties and misc. use. Any use of this document is not permitted without the written consent of STABILUS.

	Date	Name
Drawn by	07.02.2018	Höfer
Checked	16.08.2021	Milles

Document No.: 10252085

Material No.:

PISTON ROD

Ident. Doc.:

Erstelldatum: 29/6/2023 - 9:8