| supp. No. | material no. surface treatment processing acc. to STAB-Spec. 10006248 table IV Nislide black | table XVI optimized Nislide black | table VIII Nislide black | table V Nislide light | only STUS/STMX table X Nislide "G" | KOST without surface treatment | A overall length | B version |
|---|---|---|---|---|---|---|---|---|
| 36 | 328782 | | | | 328782 | | 75.0 | 1 |
| 37 | 6923AY | | | | 6923AY | 8434WZ | 96.0 | 1 |
| 39 | 335185 | | | | 335185 | | 138.0 | 1 |
| 40 | 338354 | | | | 338354 | 8435WU | 99.0 | 1 |
| 41 | 360872 | | | | 360872 | | 135.0 | 1 |
| 42 | 363855 | | | | 363855 | 453863 | 123.0 | 1 |
| 43 | 5327GD | | | | 5327GD | | 134.5 | 1 |
| 44 | 9886BG | | | | 9886BG | 8436WP | 93 | 1 |
| 47 | 477451 | | | | 477451 | | 156.0 | 1 |
| 49 | 486388 | | | | 486388 | 525084 | 141.0 | 1 |
| 50 | 486574 | | | | 486574 | | 126.0 | 1 |
| 51 | 541982 | | | | 541982 | 523889 | 198.0 | 1 |
| 52 | 488712 | | | | 488712 | 524845 | 159.0 | 1 |
| 53 | 8654LQ | | | | 8654LQ | | 83.0 | 1 |
| 54 | 493759 | | | | 493759 | 453385 | 102.0 | 1 |
| 55 | 549061 | | | | 549061 | 523650 | 210.0 | 1 |
| 56 | 511897 | | | | 511897 | 330962 | 132.0 | 1 |
| 58 | 532681 | | | | 532681 | 524606 | 129.0 | 1 |
| 60 | | | 6277NZ | | | | 204.0 | 1 |
| 61 | 1556WZ | | | | 1556WZ | | 131.0 | 1 |
| 62 | 619248 | | | | 619248 | 504530 | 150.0 | 1 |
| 63 | | | 5104IJ | | | | 273.0 | 1 |
| 65 | 594032 | | | | 594032 | 445941 | 78.0 | 1 |
| 66 | 4245LX | | | | 4245LX | | 162.0 | 1 |
| 67 | 7972KF | | | | 7972KF | | 153.0 | 1 |
| 68 | 577502 | | | | 577502 | | 87.0 | 1 |
| 69 | 580643 | | | | 580643 | | 114.0 | 1 |
| 72 | 2451NE | | | | 2451NE | | 165.0 | 1 |
| 76 | 1863PO | | | | 1863PO | 453146 | 204.0 | 1 |

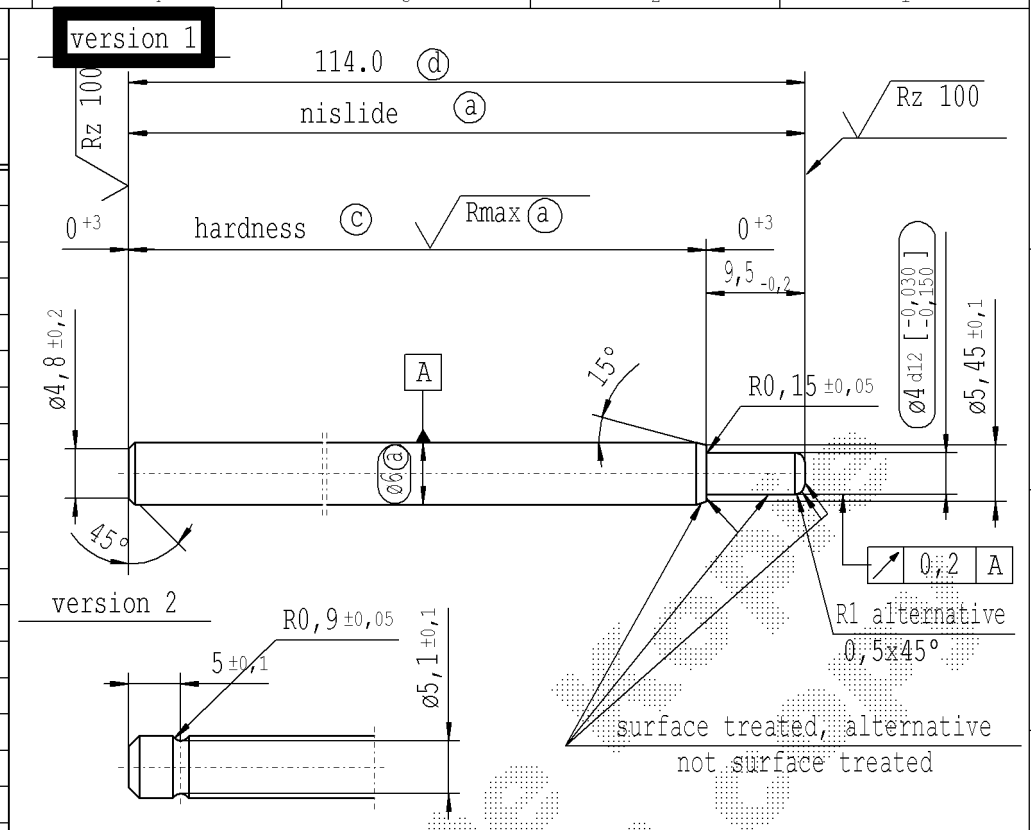


* only Tab. IV

(a) piston rod processing per STAB-Spec. 10006248

(c) before grinding: Hardness depth and hardness test acc. to STAB-Spec. 10258370

(d) tolerance +0,2 -0,1 after turning; +0,2 after straightening; ±0,2 after chroming/nisliding

Rz 25 (Rz 100 Rmax (a))

+0,2 -0,2

sheet 2 of 4

AIAG CQI-standards acc. to STAB-Spec. 10027692

Environmental protection acc. to STAB-Spec. 10005649

| DE: X | EN: X | ES: | IT: | PR: | FR: | RO: X | CAD created document handwritten changes not permitted |
|---|---|---|---|---|---|---|---|

| | | | | | |
|---|---|---|---|---|---|
| new | chrome DOK 10214402 | RO: X | (c) = acc. STAB-Spec. 10258370 | Table V | Table XVI |
| old | - | - | (c) = RHT 0,4 .... 0,7 mm | - | - |
| Field | Pos 11,37,40,44 | - | B 5-6 | - | - |
| Date/Name | 12.08.2014 Höfer | 15.08.2016 Höfer | 02.05.2019 Donat | 19.07.2021 Donat | 02.08.2023 Donat |
| Chg. No. | 615927 | 642682 | 678231 | 699518 | 724795 |
| Rev. | 28 | 29 | 30 | 31 | 32 |

Material: mat.no. 010707

Edge tolerances acc. to DIN ISO 13715

Surface finish: DIN EN ISO 1302

Replaces:

STABILUS

All dimensions are in mm

Marking of special characteristics according to STAB-Spec. 10270932

Scale: (Original DIN A3) 2:1

Dimensions without tolerances DIN ISO 2768 mK

We reserve all rights to this document, to any patents or patent registrations related hereto, and to the duplication, retransmission by third parties and misc. use. Any use of this document is not permitted without the written consent of STABILUS.

| | Date | Name |
|---|---|---|
| Drawn by | 20.05.1992 | Kirsch |
| Checked | 02.08.2023 | Milles |

Document No.: 10003697

Material No.:

PISTON ROD

The print-out is not subject to the modification service.

CONFIDENTIAL! Intended for internal and supplier use

EN

Ident. Doc.: SN 53.11-06/03

Date/Time: 14/8/2023 - 8:47

Printed by: DNLOPEZ DOK-NR.:10003697

***** Printdate: 8/25/2023 / 9:37:10 AM ***** print not scaled *****

PLANT: RAM1 PRINTER : DNLOPEZ DOK-NR.:10003697