The print-out is not subject to the modification service.

Intended for internal and supplier use

EN

supp. No.	material no.			A	E
	processing and surface treatment acc. to STAB-Spec.			overall length	length without endfitting stud
	10006248 Tab. XVI optimized (a) version 1	10006248 Tab. X (a) version 1	10028959 Tab. I (b) version 2		
1	143925	143925	143925	204	196
2	508405	508405	508405	195	187
3	221129	221129	221129	180	172
4	378630	378630	378630	192	184
5	339676	339676	339676	186	178
	xxxxxx	xxxxxx	xxxxxx	234	226

version 1 (only self-manufacturing) * material: 010707

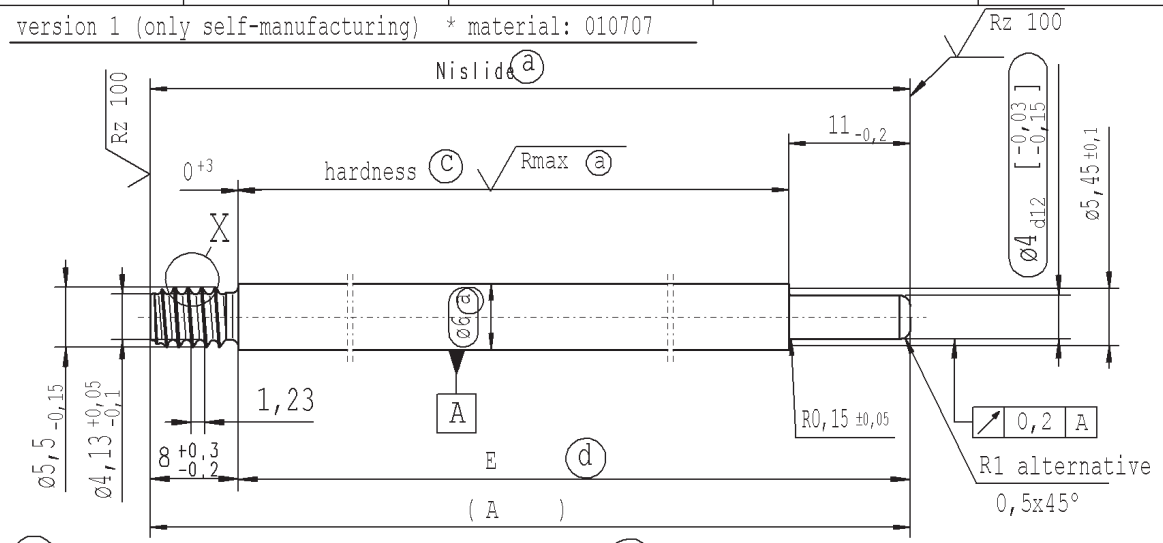

(c) before grinding:Hardness depth and hardness test acc. to STAB-Spec. 10258370

(d) tolerances: +0,2 -0,1 after turning; ±0,2 after straightening; ±0,2 after nisliding

version 2 (only external production) * material: 1.1193 S45C JISG 4051

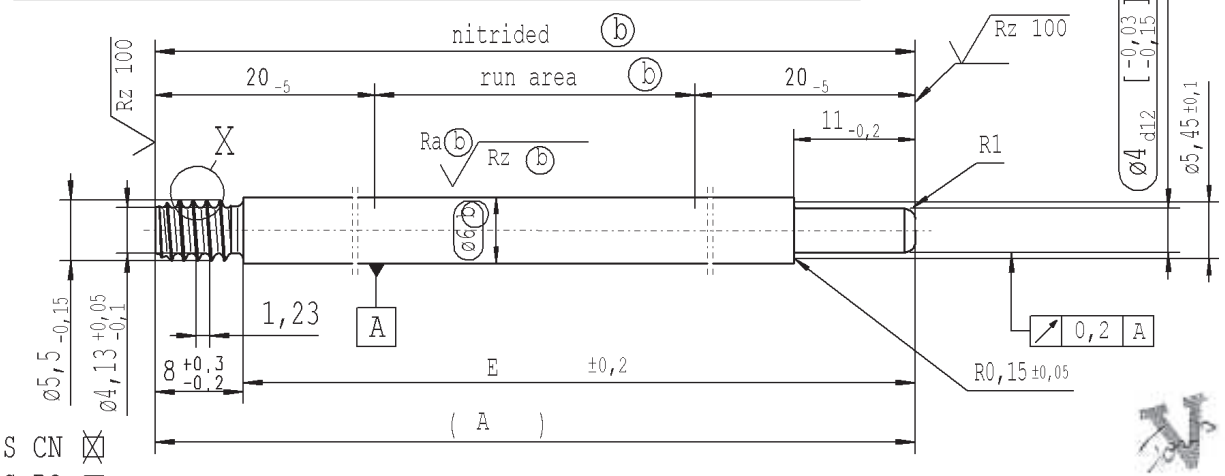

ZS CN ☒
ZS RO ☐

approved lengths: 80-600 mm

pre-worked: (only self-manufacturing)

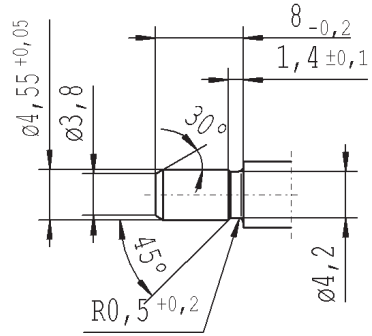

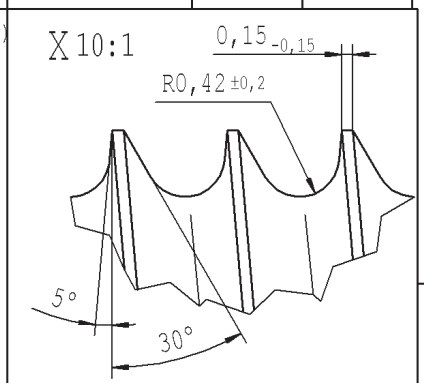

Rz 25 (Rz 100 Rmax (a) Ra (b) Rz (b)) +0,2 -0,2

sheet 1 of 1

AIAG CQI-standards acc. to STAB-Spec. 10027692

Environmental protection acc. to STAB-Spec. 10005649

DE: X	EN: X	ES:	IT:	PR:	FR:	RO: X	CAD created document; handwritten changes not permitted

new	ZS CN / ZS RO; no technical change, no new first sample required	Tab.XVI; Tab. X; no technical change, no new first sample required
old	-	Tab.IV; -
Field	B/5	-
Date/Name	16.09.2022 Hein	10.10.2022 Jablonski
Chg. No.	715301	715965
Rev.	0	0

Material: *

Edge tolerances acc. to DIN ISO 13715

Surface finish DIN EN ISO 1302

Replaces:

STABILUS

All dimensions are in mm

Marking of special characteristics according to STAB-Spec. 10270932

Scale: (Original DIN A3) 2:1

Dimensions without tolerances DIN ISO 2768-mK

We reserve all rights to this document, to any patents or patent registrations related hereto, and to the duplication, retransmission by third parties and misc. use. Any use of this document is not permitted without the written consent of STABILUS.

PISTON ROD

	Date	Name
Drawn by	30.11.2020	Donat
Checked	10.10.2022	Schnass

Document No.: 10283692

Material No.:

Ident. Doc.:

Erstelldatum: 3/5/2023 - 6:24