The print-out is not subject to the modification service.
CONFIDENTIAL! Intended for internal and supplier use
EN

supp. No.	material no.			A	E
	processing and surface treatment acc. to STAB-Spec.			overall length	length without endfitting stud
	10006248 Tab. IV (a) version 1	10006248 Tab. X (a) version 1	10028959 Tab. I (b) version 2		
1	194834	194834	194834	420	385
2	159943	159943	159943	282	247
3	698410	698410	698410	369	334
4	699366	699366	699366	588	553
5	700322	700322	700322	480	445
6	701278	701278	701278	429	394
7	701756	701756	701756	468	433
8	702712	702712	702712	288	253
9	703190	703190	703190	243	208
10	704146	704146	704146	342	307
11	705102	705102	705102	276	241
12	705580	705580	705580	188	153
13	706058	706058	706058	174	139
14	713467	713467	713467	300	265
15	714184	714184	714184	324	289
16	714662	714662	714662	216	181

pre-worked: (only self-manufacturing)

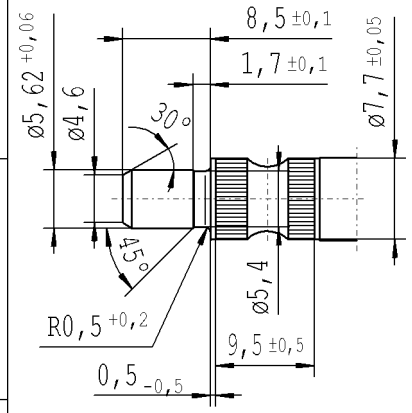

X 10:1

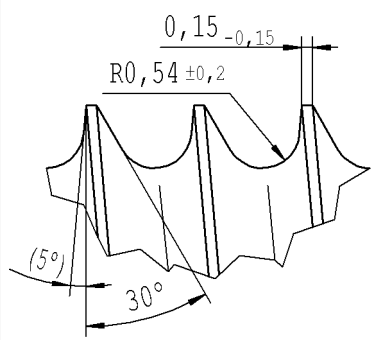

version 1 (only self-manufacturing) * material: 010715

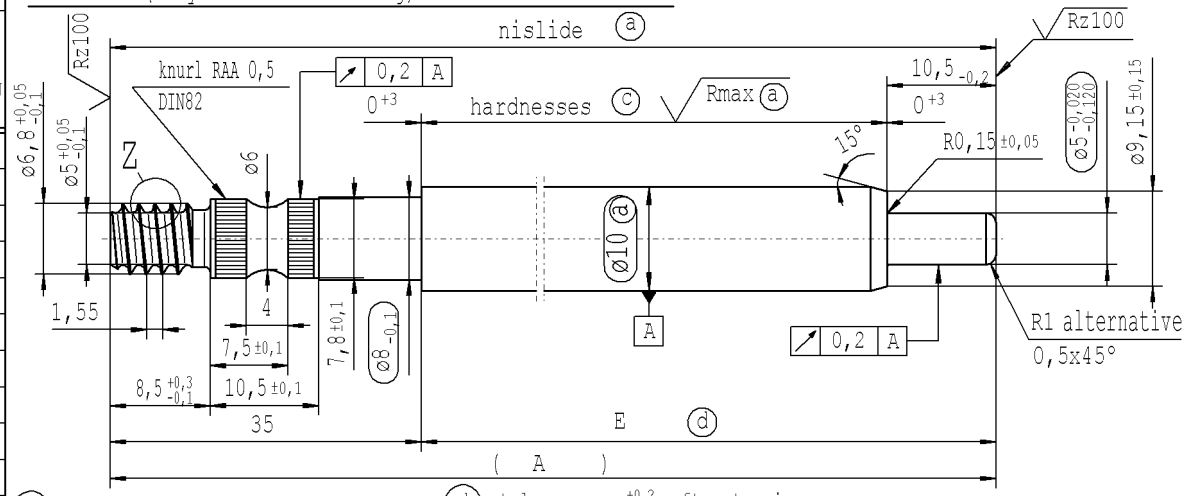

(c) before grinding:
Hardness depth and hardness test
acc. to STAB-Spec. 10258370

(d) tolerances: +0,2 -0,1 after turning;
±0,3 after straightening;
±0,3 after nisliding

version 2 (only external production) * material: 1.1193 S45C JISG 4051, for ZS-RO alt. 183844 (C35EC)

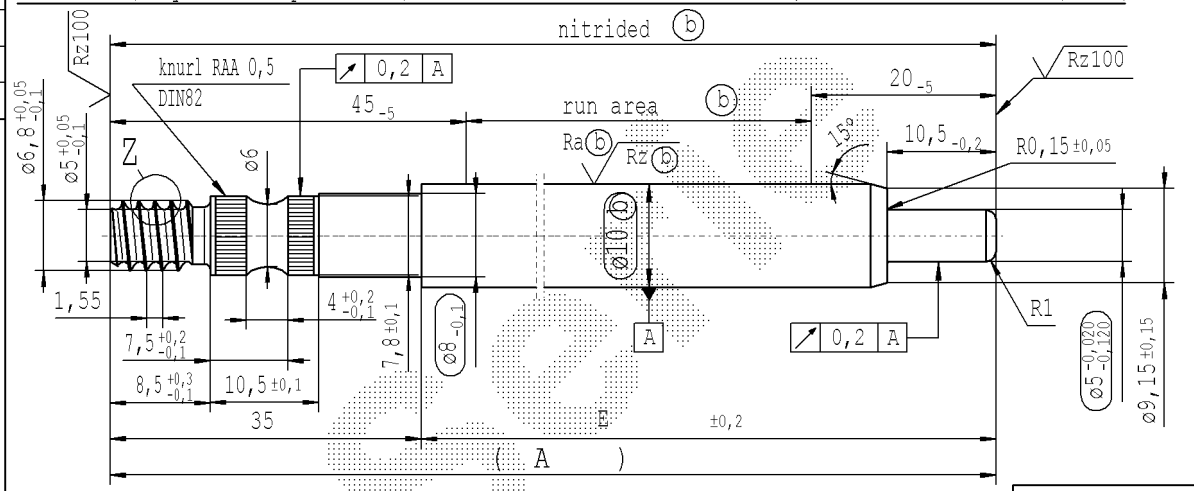

ZS CN ☐
ZS RO ☒

approved lengths: 50-600 mm

Rz 25 (Rz 100 Rmax (a) Ra (b) Rz (b)) +0,2 -0,2

sheet 1 of 3

AIAG CQI-standards acc. to STAB-Spec. 10027692

Environmental protection acc. to STAB-Spec. 10005649

DE: X	EN: X	ES:	IT:	PR:	FR:	RO: X	CAD created document; handwritten changes not permitted

new	INITIAL RELEASE	4 +0,2 -0,1 / 7,5 +0,2 -0,1	version 2 .... , for ZS-RO alt. 183844 (C35EC)
old	-	4 / 7,5 ±0,1	-
Field	-	C4 / B5	D/1-5
Date/Name	10.05.2021 Hein	01.09.2022 Jablonski	27.07.2023 Jablonski
Chg. No.	-	714769	724875
Rev.	0	1	2

Ident. Doc.:

Material: *

Edge tolerances acc. to DIN ISO 13715
Surface finish DIN EN ISO 1302
Replaces:

STABILUS

All dimensions are in mm

Scale: 2:1 (Original DIN A3)

Marking of special characteristics according to STAB-Spec. 10270932

Dimensions without tolerances DIN ISO 2768-mK

We reserve all rights to this document, to any patents or patent registrations related hereto, and to the duplication, retransmission by third parties and misc. use. Any use of this document is not permitted without the written consent of STABILUS.

PISTON ROD

	Date	Name
Drawn by	10.05.2021	C.Hein
Checked	27.07.2023	Klinkner

Document No.: 10293644

Material No.:

Erstelldatum: 30/10/2023 - 9:21

The print-out is not subject to the modification service.

CONFIDENTIAL! Intended for internal and supplier use

EN

supp. No.	material no.			A	E
	processing and surface treatment acc. to STAB-Spec.			overall length	length without endfitting stud
	10006248 Tab. IV (a) version 1	10006248 Tab. X (a) version 1	10028959 Tab. I (b) version 2		
17	715140	715140	715140	200	165
18	715618	715618	715618	270	235
19	913988	913988	913988	207	172
20	939083	939083	939083	312	277
21	995965	995965	995965	273	238
22	045224	045224	045224	471	436
23	048570	048570	048570	432	397
24	068168	068168	068168	390	355
25	083703	083703	083703	315	280
26	458455	458455	458455	393	358
27	459411	459411	459411	204	169
28	658978	658978	658978	246	211
29	662802	662802	662802	510	475
30	669016	669016	669016	513	478
31	673557	673557	673557	381	346
32	700564	700564	700564	252	217

version 1 (only self-manufacturing) * material: 010715

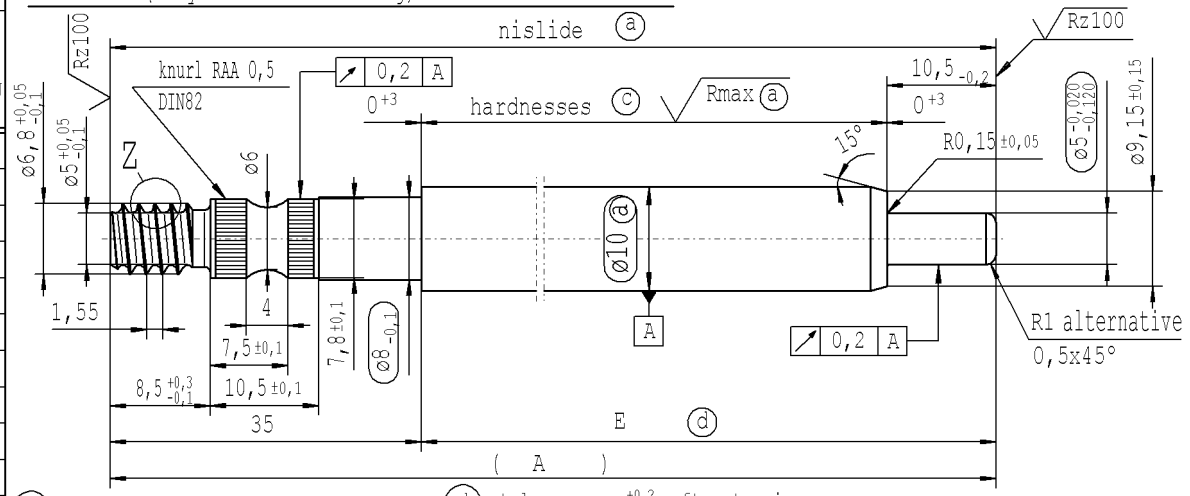

version 2 (only external production) * material: 1.1193 S45C JISG 4051, for ZS-RO alt. 183844 (C35EC)

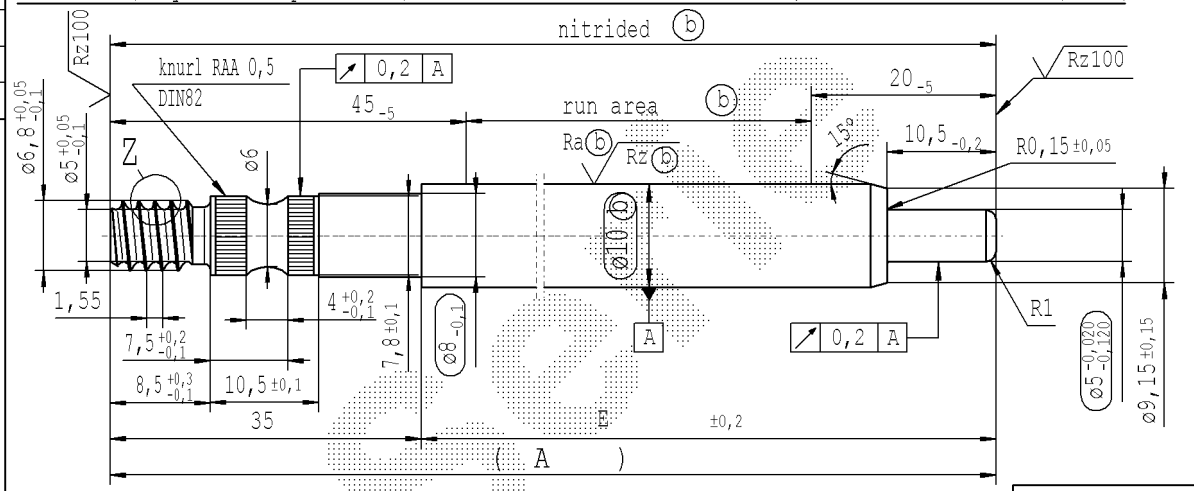

pre-worked: (only self-manufacturing)

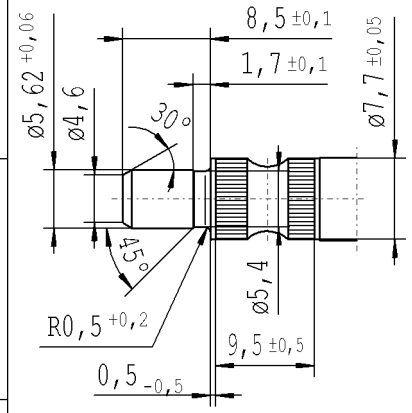

X 10:1

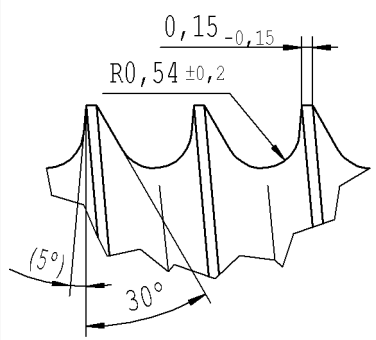

ZS CN ☐
ZS RO ☒

approved lengths: 50-600 mm

Rz 25 (Rz 100 Rmax (a) Ra (b) Rz (b)) +0,2 -0,2

sheet 2 of 3

AIAG CQI-standards acc. to STAB-Spec. 10027692

Environmental protection acc. to STAB-Spec. 10005649

DE: X	EN: X	ES:	IT:	PR:	FR:	RO: X	CAD created document; handwritten changes not permitted

new	INITIAL RELEASE	4 +0,2 -0,1 / 7,5 +0,2 -0,1	version 2 .... , for ZS-RO alt. 183844 (C35EC)
old	-	4 / 7,5 ±0,1	-
Field	-	C4 / B5	D/1-5
Date/Name	10.05.2021 Hein	01.09.2022 Jablonski	27.07.2023 Jablonski
Chg. No.	-	714769	724875
Rev.	0	1	2

Ident. Doc.:

Material: *

Edge tolerances acc. to DIN ISO 13715

Surface finish DIN EN ISO 1302

Replaces:

STABILUS

All dimensions are in mm

Scale: 2:1 (Original DIN A3)

Marking of special characteristics according to STAB-Spec. 10270932

Dimensions without tolerances DIN ISO 2768-mK

We reserve all rights to this document, to any patents or patent registrations related hereto, and to the duplication, retransmission by third parties and misc. use. Any use of this document is not permitted without the written consent of STABILUS.

PISTON ROD

	Date	Name
Drawn by	10.05.2021	C.Hein
Checked	27.07.2023	Klinkner

Document No.: 10293644

Material No.:

Erstelldatum: 30/10/2023 - 9:21

The print-out is not subject to the modification service.

CONFIDENTIAL! Intended for internal and supplier use

EN

supp. No.	material no.			A	E
	processing and surface treatment acc. to STAB-Spec.			overall length	length without endfitting stud
	10006248 Tab. IV (a) version 1	10006248 Tab. X (a) version 1	10028959 Tab. I (b) version 2		
33	922836	922836	922836	591	556

version 1 (only self-manufacturing) * material: 010715

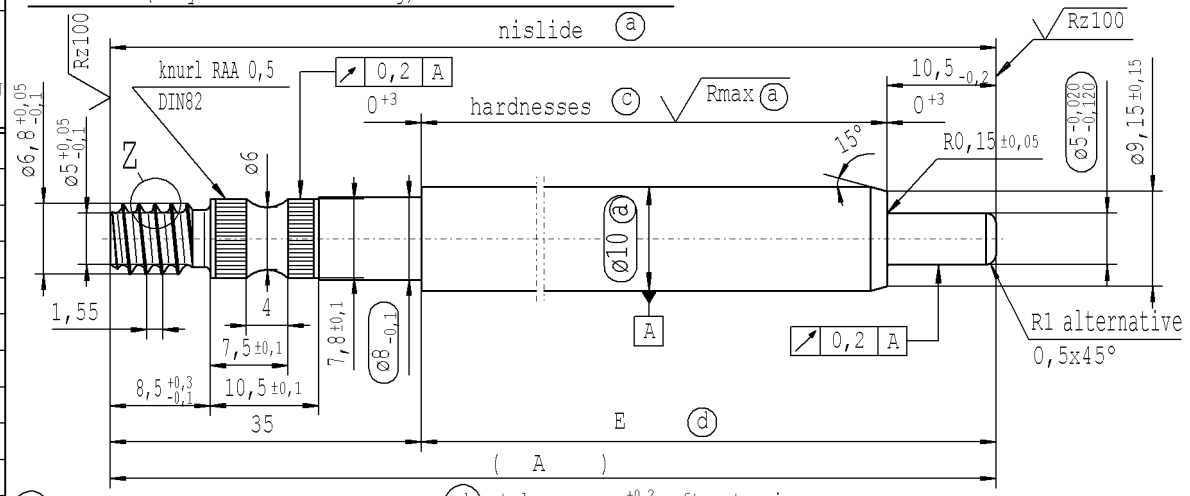

(c) before grinding:
Hardness depth and hardness test
acc. to STAB-Spec. 10258370

(d) tolerances: +0,2 -0,1 after turning;
±0,3 after straightening;
±0,3 after nisliding

version 2 (only external production) * material: 1.1193 S45C JISG 4051, for ZS-RO alt. 183844 (C35EC)

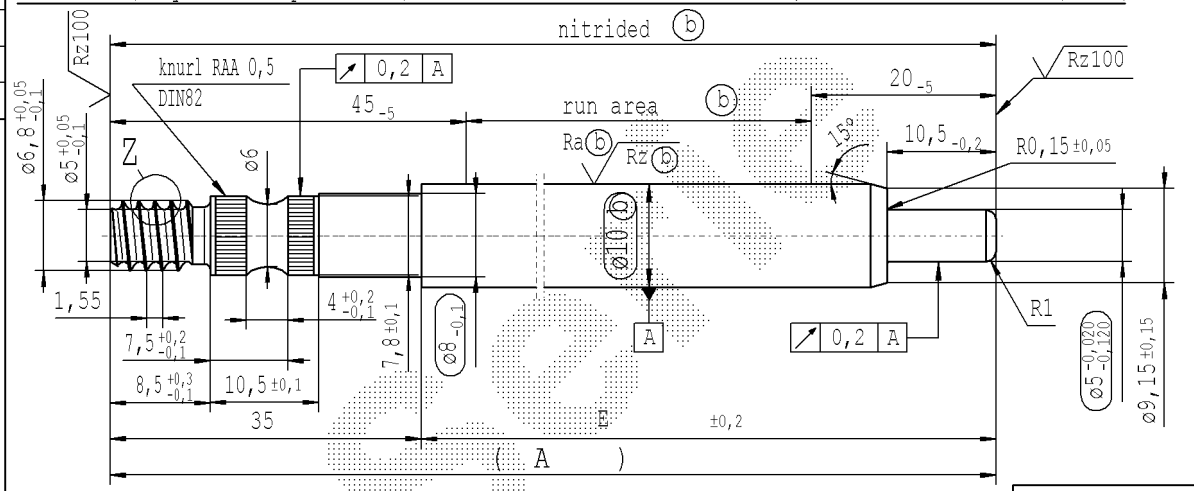

ZS CN ☐
ZS RO ☒

approved lengths: 50-600 mm

Rz 25 (Rz 100 Rmax (a) Ra (b) Rz (b)) +0,2 -0,2

sheet 3 of 3

pre-worked: (only self-manufacturing)

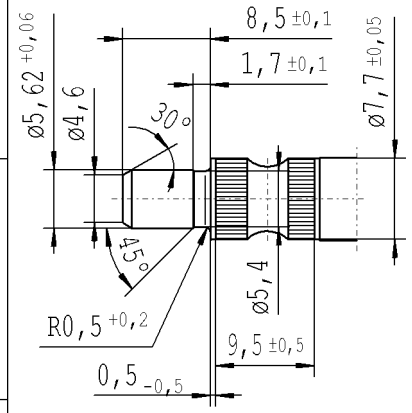

X 10:1

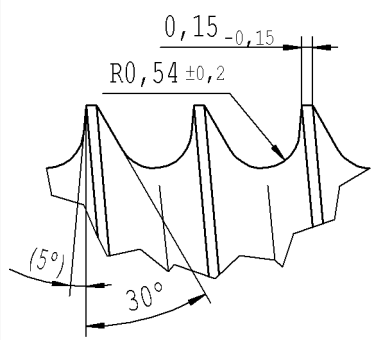

AIAG CQI-standards acc. to STAB-Spec. 10027692

Environmental protection acc. to STAB-Spec. 10005649

DE: X	EN: X	ES:	IT:	PR:	FR:	RO: X	CAD created document; handwritten changes not permitted

Ident. Doc.:			
new	INITIAL RELEASE	4 +0,2 -0,1 / 7,5 +0,2 -0,1	version 2 .... , for ZS-RO alt. 183844 (C35EC)
old	-	4 / 7,5 ±0,1	-
Field	-	C4 / B5	D/1-5
Date/Name	10.05.2021 Hein	01.09.2022 Jablonski	27.07.2023 Jablonski
Chg. No.	-	714769	724875
Rev.	0	1	2

Material: *

Edge tolerances acc. to DIN ISO 13715

Surface finish DIN EN ISO 1302

Replaces:

STABILUS

All dimensions are in mm

Scale: (Original DIN A3) 2:1

Marking of special characteristics according to STAB-Spec. 10270932

Dimensions without tolerances DIN ISO 2768-mK

We reserve all rights to this document, to any patents or patent registrations related hereto, and to the duplication, retransmission by third parties and misc. use. Any use of this document is not permitted without the written consent of STABILUS.

	Date	Name
Drawn by	10.05.2021	C.Hein
Checked	27.07.2023	Klinkner

Document No.: 10293644

Material No.:

PISTON ROD

Erstelldatum: 30/10/2023 - 9:21